

Krafter's Land

Sink & Faucet

Krafter's Land

One-stop shop for a kitchen or bath remodel.

1201 Andover Park E, Suite 103, Tukwila WA 98188

206-809-6339 info@kraftersland.com

We truly believe that having a kitchen both functional and aesthetic is the dream for most homeowners and even those living in rental spaces. At Krafter's Land, our mission is to improve the living quality of our customers' life through intelligent designs and durable products.

Krafter's Land Cabinetry Inc was founded in Seattle, USA in 2020, and our goal is growing into one of the largest international kitchen remodel suppliers. As a leading supplier, we will have numerous manufacturing distributors across the whole country. By developing one of the largest wholesaling networks to provide the fastest supply turnaround time for all customers.

We are fully committed to working with all customers to satisfy their needs and exceed their expectations. Krafter's Land focuses on providing an affordable solution for your kitchen and bath remodeling needs by selling top notch products and providing excellent customer service.

Our products include cabinets, quartz stones, flooring, shower door, mosaic, faucets and sinks etc. Over the years, we've built trust with our customers because we reflect the craftsmanship and quality in our brand product that we would want in our own homes. We continually strive to strengthen that confidence in all products.



SB-3218D



- Undermount Double Bowl
- Under Counter Installation
- SUS 304 Stainless Steel
- 18 Gauge Thickness
- Overall Size:32-5/16"x18-9/16"
- Bowl Size:14-9/16"x16-1/2"
- Depth:9"

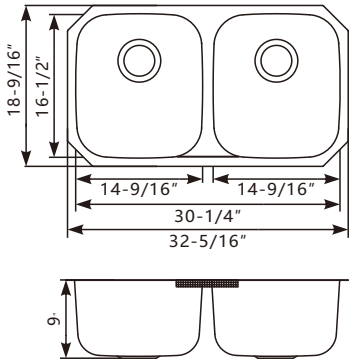

SB-3018S



- Undermount Single Bowl
- Under Counter Installation
- SUS 304 Stainless Steel
- 18 Gauge Thickness
- Overall Size:29-3/4"x18"
- Bowl Size:27-11/16"x16"
- Depth:9"

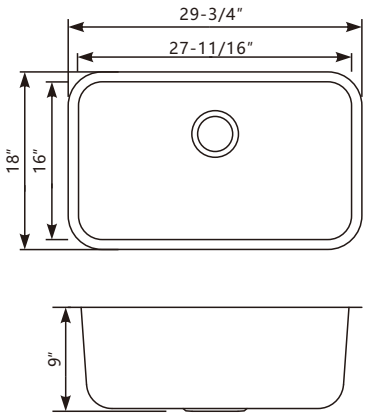

SB-3218S



- Undermount Single Bowl
- Under Counter Installation
- SUS 304 Stainless Steel
- 18 Gauge Thickness
- Overall Size:32-1/4"x18-1/2"
- Bowl Size:30-3/8"x16-5/8"
- Depth:9"

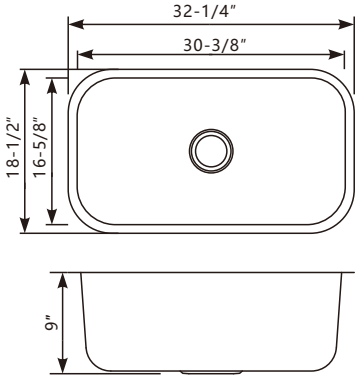

Drain, Metal Support Not Included

posheen™

DB3120LD



- Undermount Double Bowl
- Under Counter Installation
- SUS 304 Stainless Steel
- 18 Gauge Thickness
- Overall Size:31-7/16"x20-7/16"
- Left Bowl Size:12-11/16"x16-3/16"
- Right Bowl Size:15-7/16"x18-7/16"
- Left Depth:7-1/2"
- Right Depth:9"

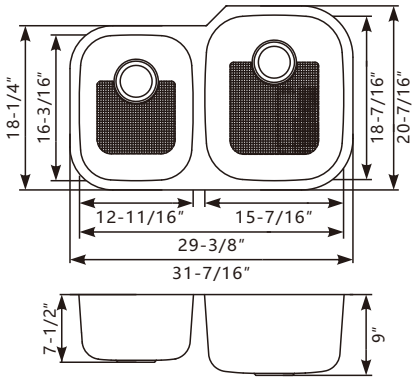

DB3120LDT 16Gauge



- Undermount Double Bowl
- Under Counter Installation
- SUS 304 Stainless Steel,
- 16 Gauge Thickness
- Overall Size:31-7/16"x20-7/16"
- Left Bowl Size:12-11/16"x16-3/16"
- Right Bowl Size:15-7/16"x18-7/16"
- Left Depth:7-1/2"
- Right Depth:9"

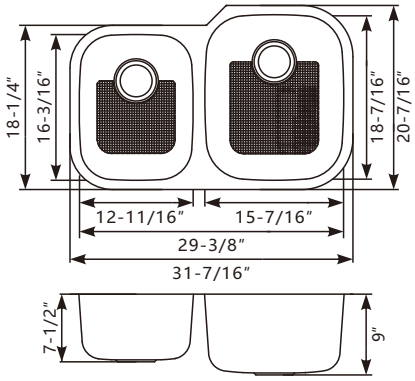

DB3120RD



- Undermount Double Bowl
- Under Counter Installation
- SUS 304 Stainless Steel
- 18 Gauge Thickness
- Overall Size:31-7/16"x20-7/16"
- Left Bowl Size:15-7/16"x18-7/16"
- Right Bowl Size:12-11/16"x16-3/16"
- Left Depth:9"
- Right Depth:7-1/2"

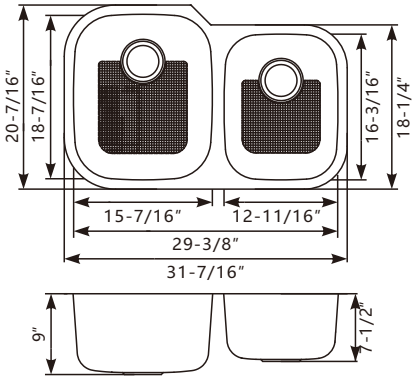

DB3120RDT 16Gauge



- Undermount Double Bowl
- Under Counter Installation
- SUS 304 Stainless Steel
- 16 Gauge Thickness
- Overall Size:31-7/16"x20-7/16"
- Left Bowl Size:15-7/16"x18-7/16"
- Right Bowl Size:12-11/16"x16-3/16"
- Left Depth:9"
- Right Depth:7-1/2"

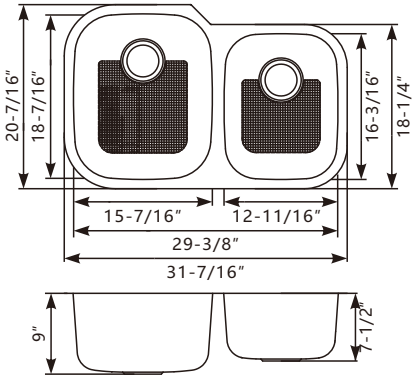

Drain, Metal Support Not Included

posheen™

SK-2318S



- Undermount Single Bowl
- Under Counter Installation
- SUS 304 Stainless Steel
- 18 Gauge Thickness
- Overall Size:23″x18″
- Bowl Size:21″x16″
- Depth:9″

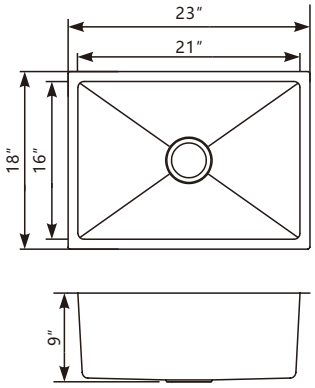

SK-2918S



- Undermount Single Bowl
- Under Counter Installation
- SUS 304 Stainless Steel
- 18 Gauge Thickness
- Overall Size:29″x18″
- Bowl Size:27″x16″
- Depth:10″

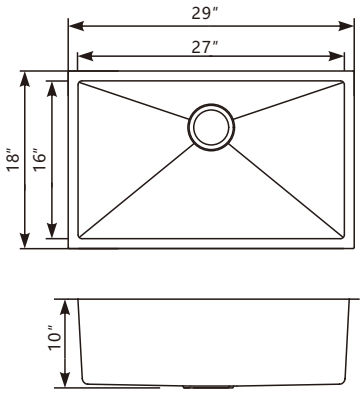

SK-3219S



- Undermount Single Bowl
- Under Counter Installation
- SUS 304 Stainless Steel
- 18 Gauge Thickness
- Overall Size:32"x19″
- Bowl Size:30″x17″
- Depth:10″

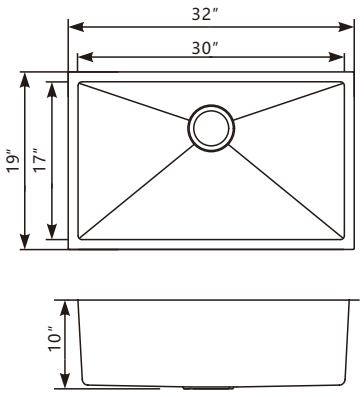

SK-3219ST

16Gauge



- Undermount Single Bowl
- Under Counter Installation
- SUS 304 Stainless Steel
- 16 Gauge Thickness
- Overall Size:32"x19″
- Bowl Size:30″x17″
- Depth:10″

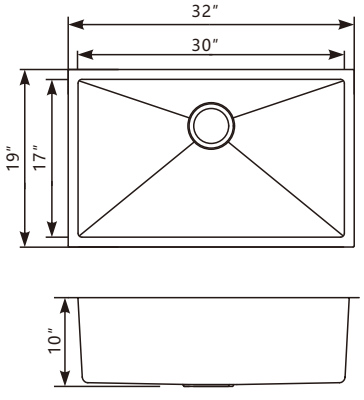

Drain, Metal Support Not Included

posheen™

SK-3219D

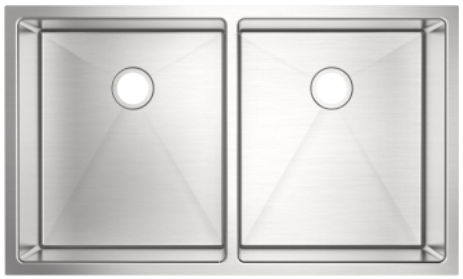

- Undermount Double Bowl
- Under Counter Installation
- SUS 304 Stainless Steel
- 18 Gauge Thickness
- Overall Size:32"x19"
- Bowl Size:14-1/2"x17"
- Depth:10"

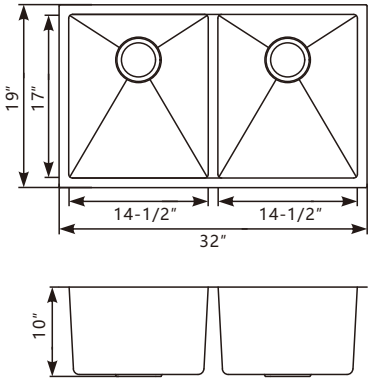

SKT-2919S

16Gauge



- Undermount Single Bowl
- Under Counter Installation
- SUS 304 Stainless Steel
- 16 Gauge Thickness
- Overall Size:29"x19-1/8"
- Bowl Size:27"x16"
- Depth:10"

Drain, Bottom Grid, Bamboo Cutting Board, Rollout Mat, Sink Colander included.

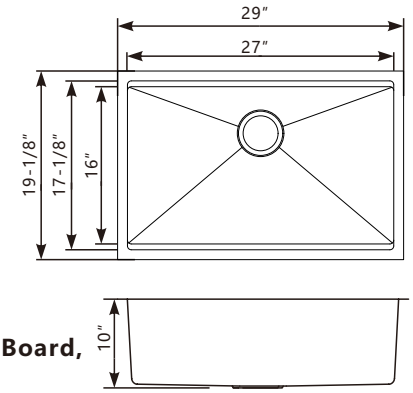

SKT-3219S

16Gauge



- Undermount Single Bowl
- Under Counter Installation
- SUS 304 Stainless Steel
- 16 Gauge Thickness
- Overall Size:32"x19"
- Bowl Size:30"x16"
- Depth:10"

Drain, Bottom Grid, Bamboo Cutting Board, Rollout Mat, Sink Colander included.

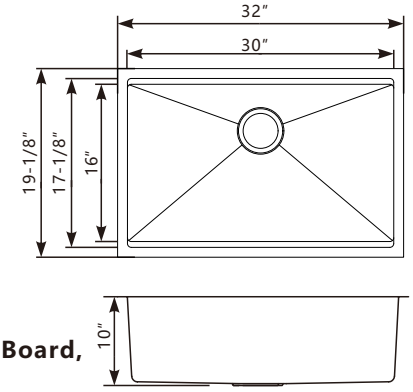

ST-3322S



- Drop-In Single Bowl
- Top Mount Installation
- SUS 304 Stainless Steel
- 18 Gauge Thickness
- Overall Size:33"x22"
- Bowl Size:31"x19"
- Depth:10"

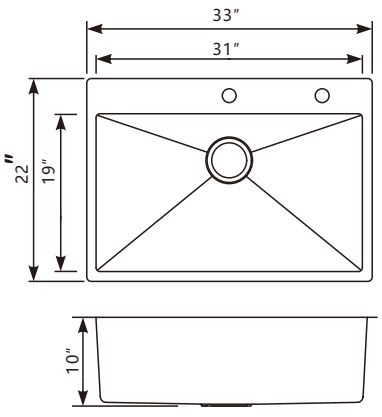

Drain, Metal Support Not Included

posheen™

SHEZ-3219S



- Undermount Single Bowl
- Under Counter Installation
- SUS 304 Stainless Steel
- 18 Gauge Thickness
- Overall Size:32"x19"
- Bowl Size:30"x17"
- Depth:10"

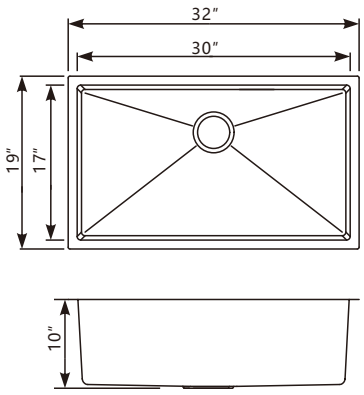

RA2818S



- Undermount Single Bowl
- Under Counter Installation
- SUS 304 Stainless Steel
- 18 Gauge Thickness
- Overall Size:28"x18"
- Bowl Size:26"x16"
- Depth:9"

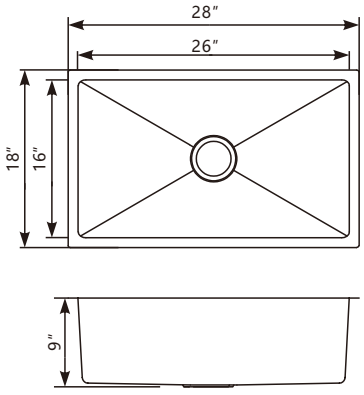

RA2818ST

16Gauge



- Undermount Single Bowl
- Under Counter Installation
- SUS 304 Stainless Steel
- 16 Gauge Thickness
- Overall Size:28"x18"
- Bowl Size:26"x16"
- Depth:9"

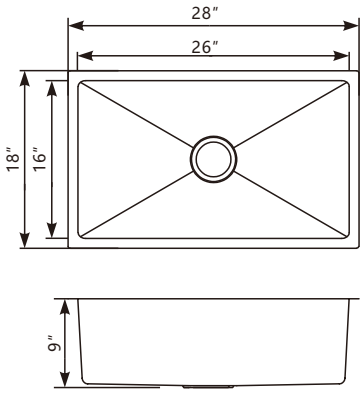

RA3118S



- Undermount Single Bowl
- Under Counter Installation
- SUS 304 Stainless Steel,
- 18 Gauge Thickness
- Overall Size:31"x18"
- Bowl Size29"x16"
- Depth:9"

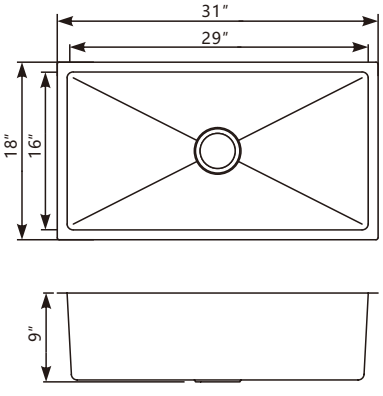

Drain, Metal Support Not Included

posheen™

RA3118ST

16Gauge



- Undermount Single Bowl
- Under Counter Installation
- SUS 304 Stainless Steel,
- 16 Gauge Thickness
- Overall Size:31"x18"
- Bowl Size:29"x16"
- Depth:9"

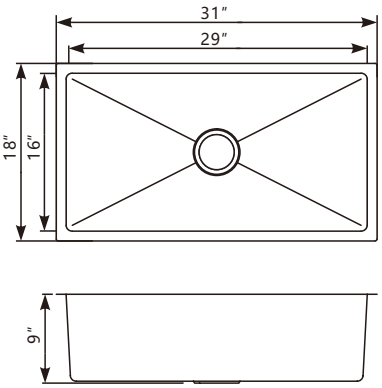

RA3118D



- Undermount Double Bowl
- Under Counter Installation
- SUS 304 Stainless Steel,
- 18 Gauge Thickness
- Overall Size:31"x18"
- Bowl Size:14"x16"
- Depth:9"

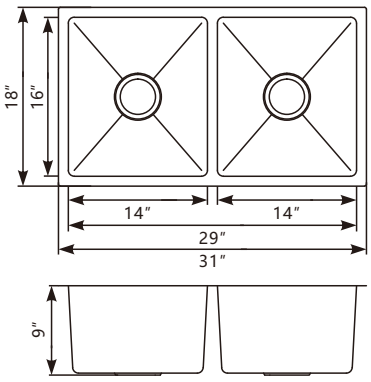

FB-3322S

16Gauge



- Apron Single Bowl
- Over Mount Installation
- SUS 304 Stainless Steel
- 16 Gauge Thickness
- Overall Size:32-7/8"x21-3/4"
- Bowl Size:30-7/8"x17-3/8"
- Depth:10"

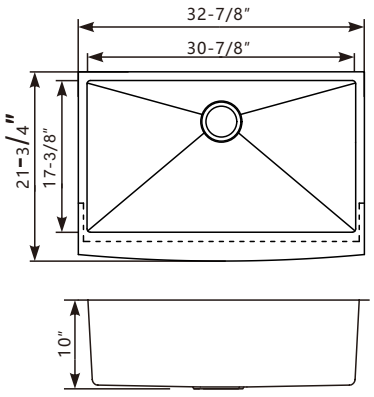

FB-3622S

16Gauge



- Apron Single Bowl
- Over Mount Installation
- SUS 304 Stainless Steel
- 16 Gauge Thickness
- Overall Size:35-7/8"x21-3/4"
- Bowl Size:33-7/8"x17-3/8"
- Depth:10"

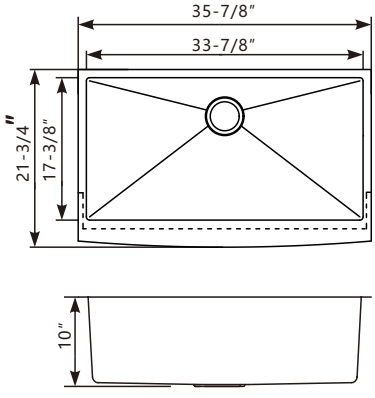

Drain, Metal Support Not Included

FB-3622D

16 Gauge



- Apron Double Bowl
- Over Mount Installation
- SUS 304 Stainless Steel
- 16 Gauge Thickness
- Overall Size:35-7/8"x21-3/4"
- Bowl Size:16-3/8"x17-3/8"
- Depth:10"

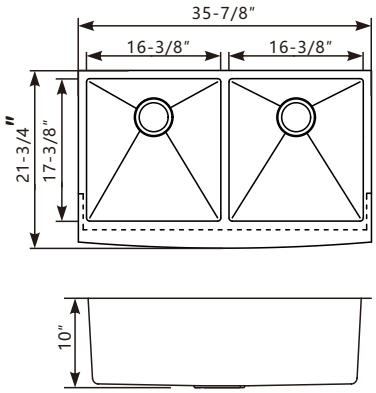

MB3321ST

16 Gauge



- Apron Single Bowl
- Over Mount Installation
- SUS 304 Stainless Steel,
- 16 Gauge Thickness
- Overall Size:32-7/8"x20-3/4"
- Bowl Size:30"x16"
- Depth:10-1/4"

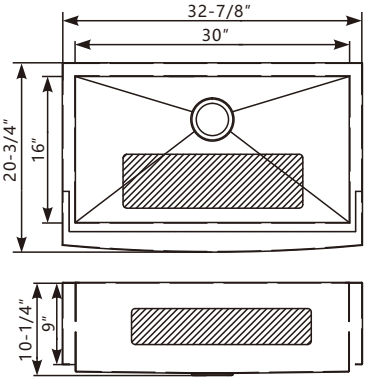

MB3321DT

16 Gauge



- Apron double Bowl
- Over Mount Installation
- SUS 304 Stainless Steel
- 16 Gauge Thickness
- Overall Size:32-7/8"x20-3/4"
- Bowl Size:14-1/2"x16"
- Depth:10-1/4"

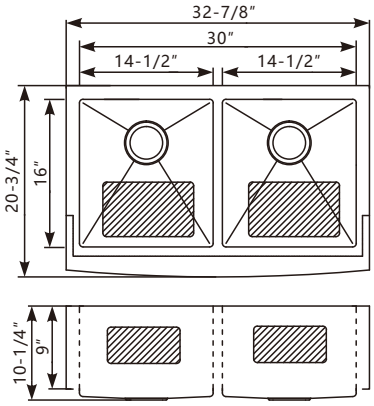

MB3621ST

16 Gauge



- Apron Single Bowl
- Over Mount Installation
- SUS 304 Stainless Steel,
- 16 Gauge Thickness
- Overall Size:35-7/8"x20-3/4"
- Bowl Size:33"x16"
- Depth:10"

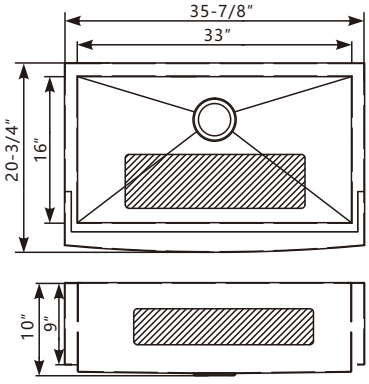

Drain, Metal Support Not Included

posheen™

MB3621DT

16 Gauge



- Apron double Bowl
- Over Mount Installation
- SUS 304 Stainless Steel
- 16 Gauge Thickness
- Overall Size:35-7/8"x20-3/4"
- Bowl Size:16"x16"
- Depth:10-1/4"

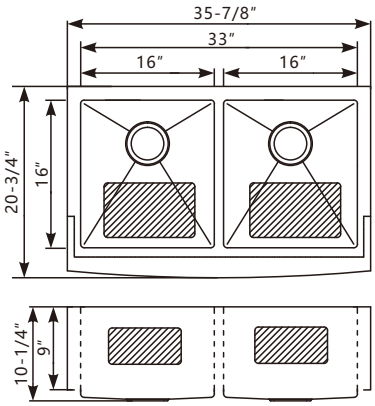

SB-2317S



- Undermount Single Bowl
- Under Counter Installation
- SUS 304 Stainless Steel
- 18 Gauge Thickness
- Overall Size:23-3/8"x17-3/4"
- Bowl Size:21-7/16"x15-13/16"
- Depth:9"

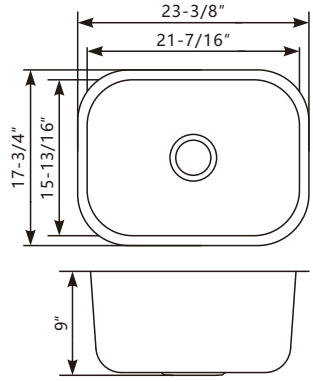

DB1512S



- Undermount Bar Sink
- Under Counter Installation
- SUS 304 Stainless Steel
- 18 Gauge Thickness
- Overall Size:15-1/16"x12-11/16"
- Bowl Size:13-1/16"x10-11/16"
- Depth:7"

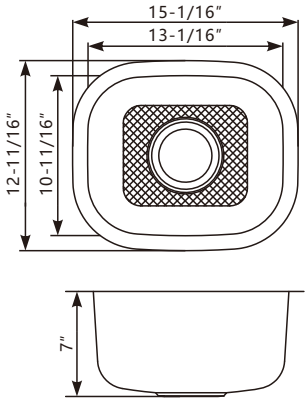

DB1518S



- Undermount Bar Bowl
- Under Counter Installation
- SUS 304 Stainless Steel
- 18 Gauge Thickness
- Overall Size:18-7/16"x14-13/16"
- Bowl Size:16-1/2"x12-7/8"
- Depth:7-1/2"

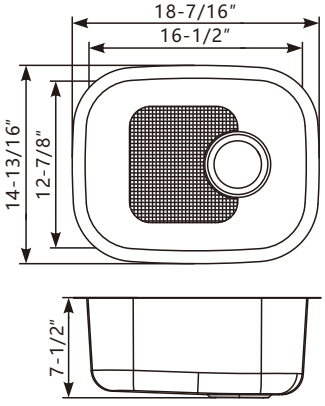

Drain, Metal Support Not Included

DB1618S



- Undermount Single Bowl
- Under Counter Installation
- SUS 304 Stainless Steel
- 18 Gauge Thickness
- Overall Size:17-13/16"x15-15/16"
- Bowl Size:15-13/16"x13-15/16"
- Depth:8"

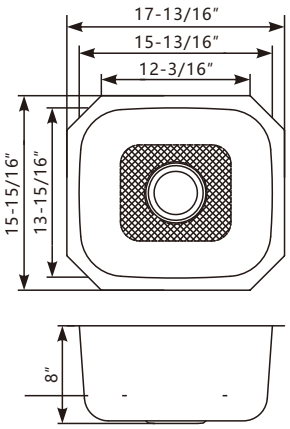

DB2321S



- Undermount Single Bowl
- Under Counter Installation
- SUS 304 Stainless Steel
- 18 Gauge Thickness
- Overall Size:23-3/16"x20-15/16"
- Bowl Size:21-3/16"x18-15/16"
- Depth:9"

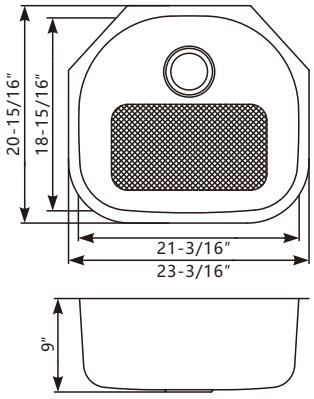

Drain, Metal Support Not Included

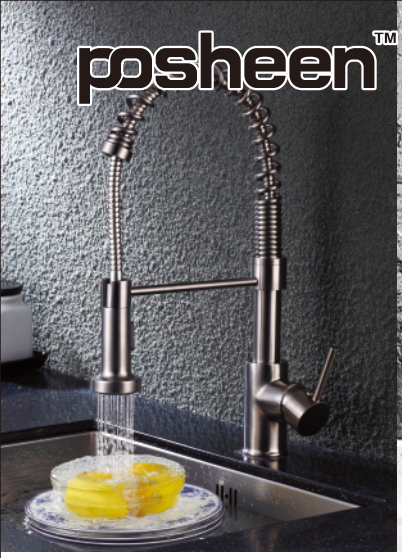





FC-3308Q


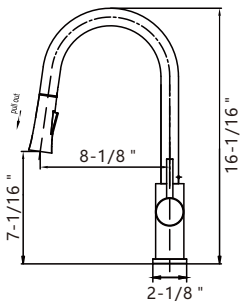

Matte black finish available

FC-8168Q


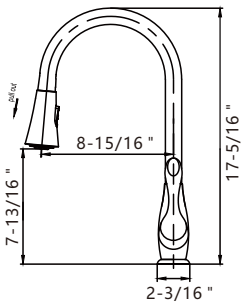

Matte black finish available

FC-8198Q


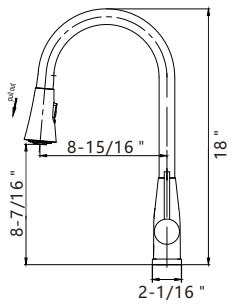

Matte black finish available

FC-15598QT


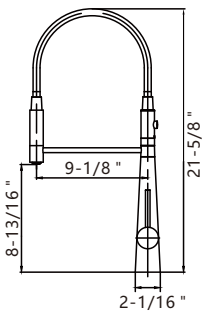

Matte black finish available

K-82H37S2-BN-A


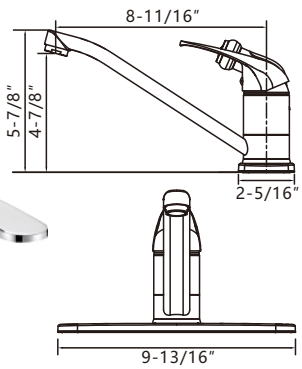

B-81H04S-BN


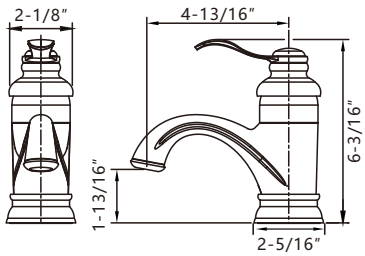

Matte black finish available

The actual color of the faucet is not exactly the same as that inthe catalog.
Please take the actual color as the standard.

B-81H32-BN

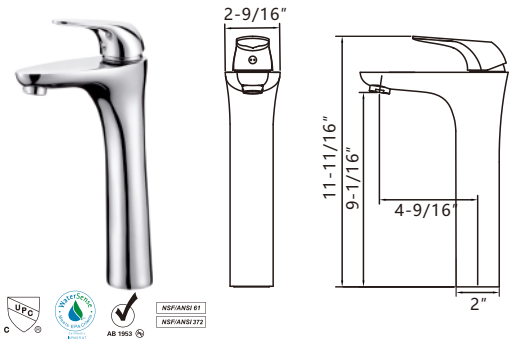

B-81H23-BN

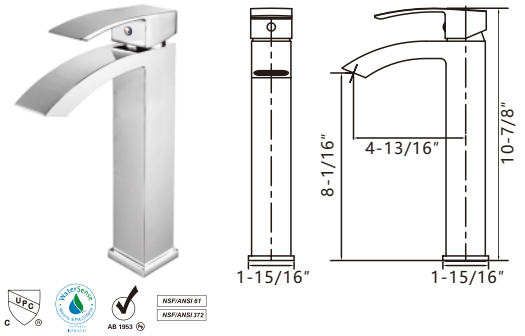

B-81H44T-BN

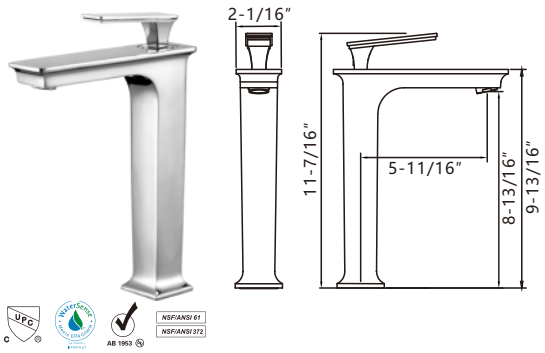

B-83H14-BN



B-83H15-BN



Matte black finish available

B-83H12-BN



B-83H25-BN

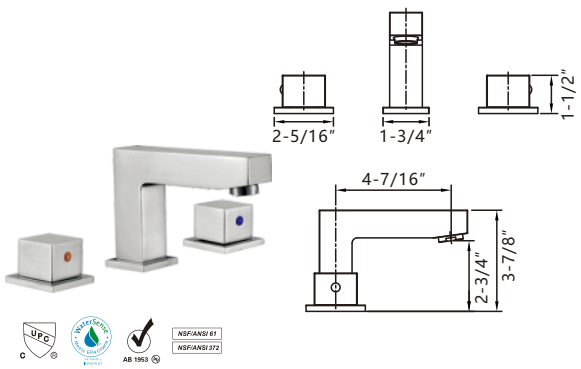

B-83H03-BN

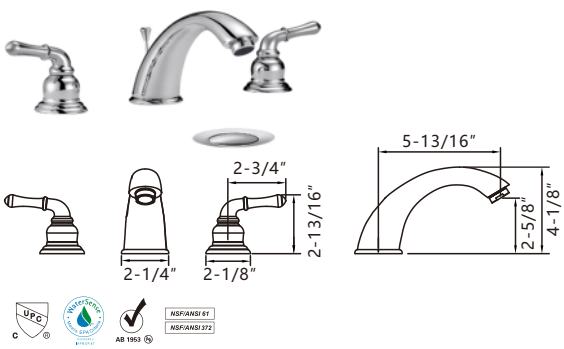

The actual color of the faucet is not exactly the same as that inthe catalog.
Please take the actual color as the standard.

B-81H6721-BN

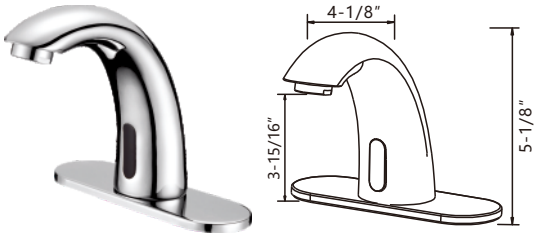

B-81H6703-BN

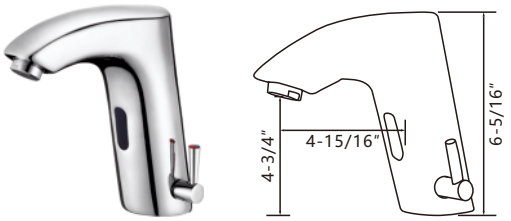

B-81H6712-BN

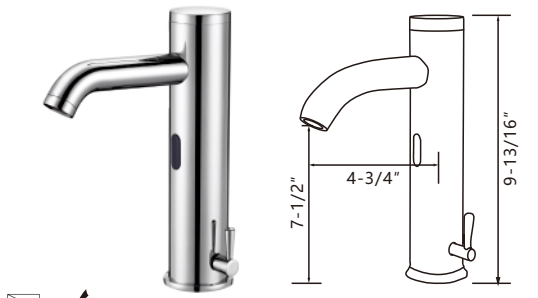

B-86H12-BN

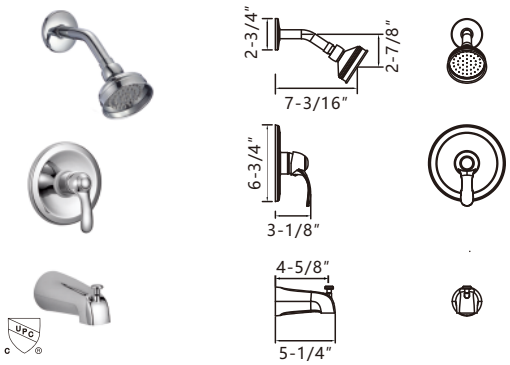

B-86H15-BN

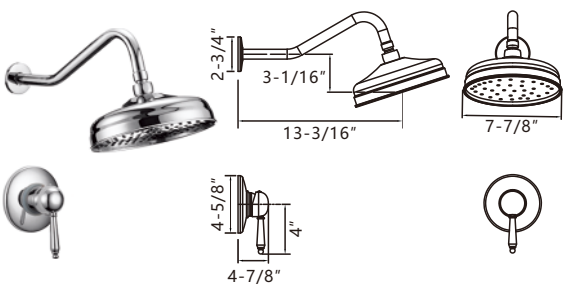

FC-19940-02

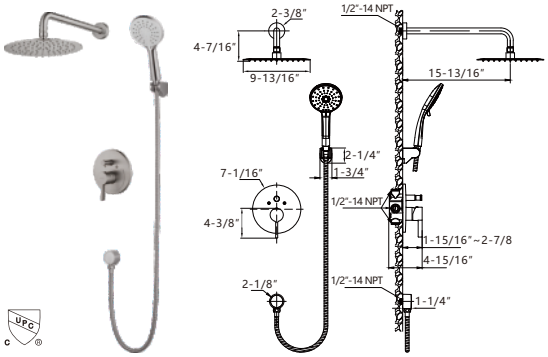

FC-19940-06

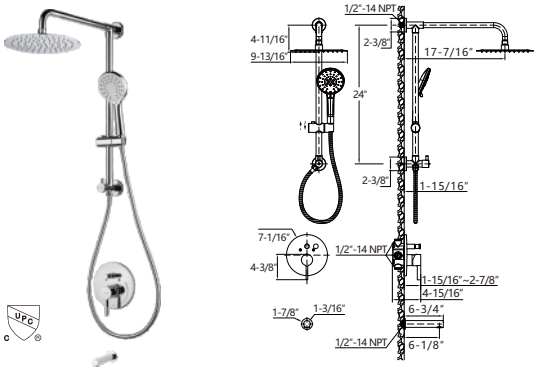

FC-19940A-04

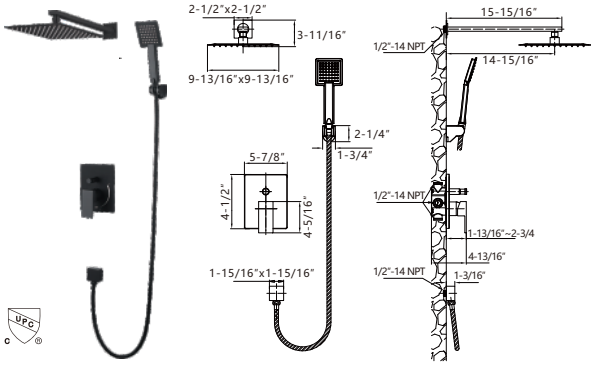

The actual color of the faucet is not exactly the same as that inthe catalog.
Please take the actual color as the standard.

B-6721HP



Mixer Valve

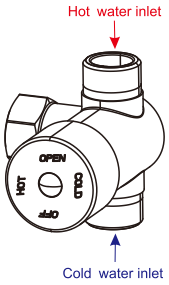

Hot water running
when mixing valve button
showed as above picture.

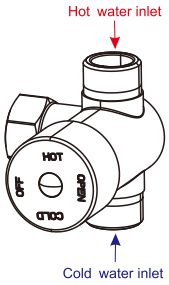

Cold water running
when mixing valve button
showed as above picture.

The actual color of the faucet is not exactly the same as that inthe catalog.
Please take the actual color as the standard.

posheen™



FC-13201QT


Chrome


Chrome & White


Gold


Gold & White

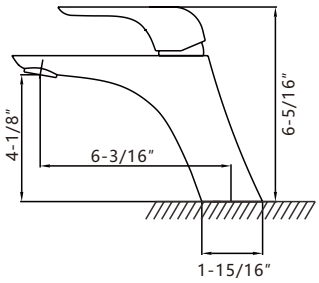

FC-23001QT


Chrome


Brushed Nickel


Matte Black


Brushed Gold

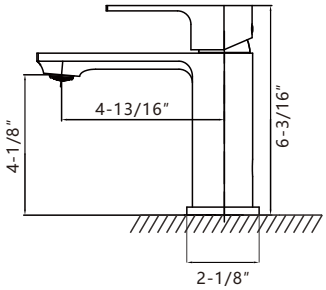

FC-22901QT


Chrome


Brushed Nickel


Matte Black


Brushed Gold

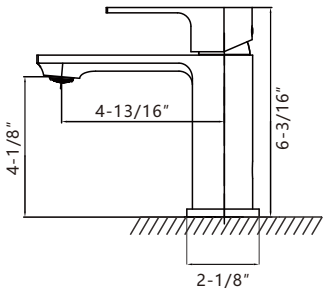

NEW PRODUCT

FC-3305QT


Brushed Nickel


Matte Black


Brushed Gold

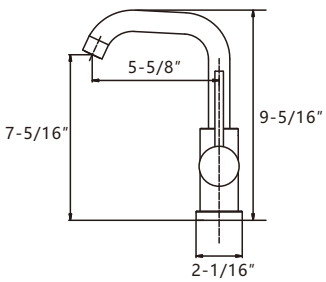

The actual color of the faucet is not exactly the same as that inthe catalog.
Please take the actual color as the standard.

posheen™

NEW PRODUCT FC-3348Q



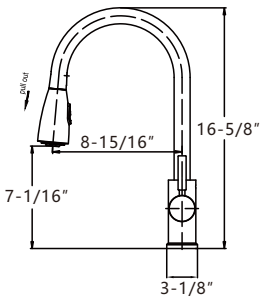

NEW PRODUCT FC-8938Q



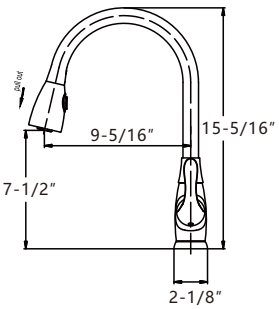

NEW PRODUCT FC-22301QT







Matte Black

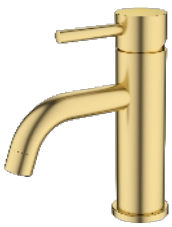

Brushed Gold

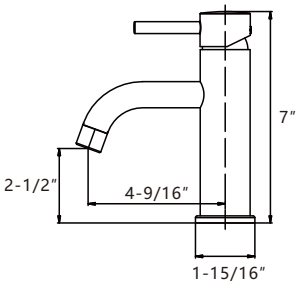

NEW PRODUCT FC-23401QT





Brushed Nickel



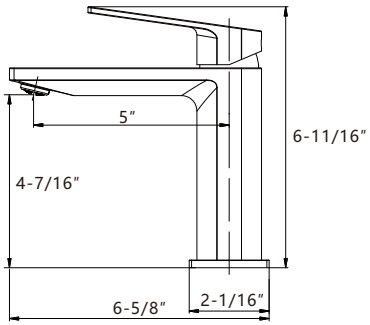



Matte Black



Brushed Gold

The actual color of the faucet is not exactly the same as that inthe catalog.
Please take the actual color as the standard.



MC-2043318T



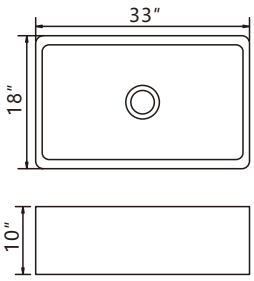

- Single Bowl Sink-Thick Wall Design
- Overall Size: 33"x18"
- Depth:10"
- Protective Bottom Grid and strainer included

MC-2043318TR



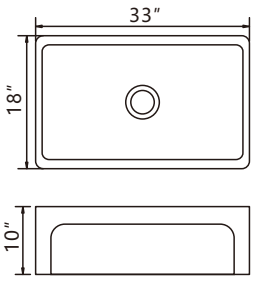

- Single Bowl Sink-Thick Wall Design
- Overall Size: 33"x18"
- Depth:10"
- Protective Bottom Grid and strainer included

MC-2043318L



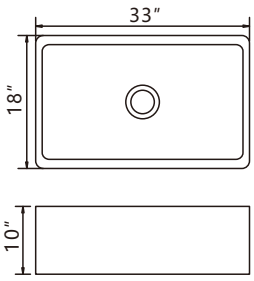

- Single Bowl Sink-Thick Wall Design
- Overall Size: 33"x18"
- Depth:10"
- Protective Bottom Grid and strainer included

MC-2043318R



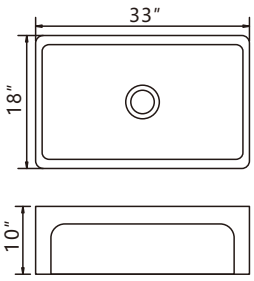

- Single Bowl Sink-Thick Wall Design
- Overall Size: 33"x18"
- Depth:10"
- Protective Bottom Grid and strainer included

Drain, Metal Support Not Included

posheen™

K-3318D

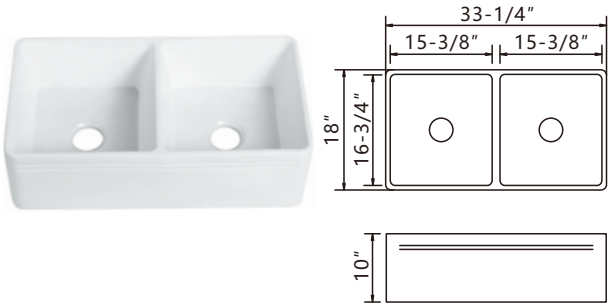

- Double Bowl Sink
- Overall Size:33-1/4″x18″
- Bowl Size:15-3/8″x16-3/4″
- Depth:10″

B-R1714U

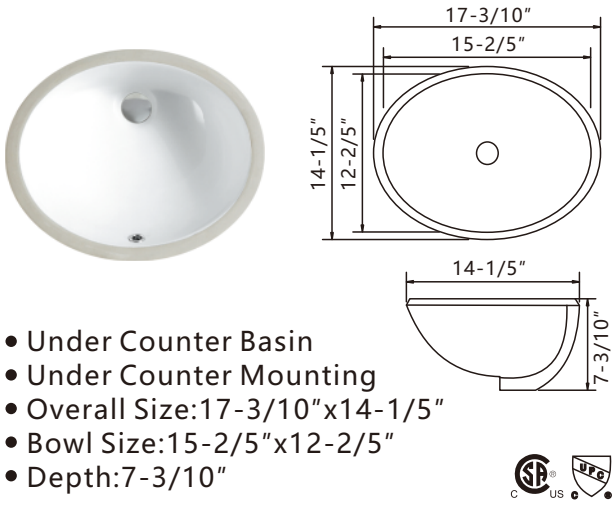

- Under Counter Basin
- Under Counter Mounting
- Overall Size:17-3/10″x14-1/5″
- Bowl Size:15-2/5″x12-2/5″
- Depth:7-3/10″

B-R1815U

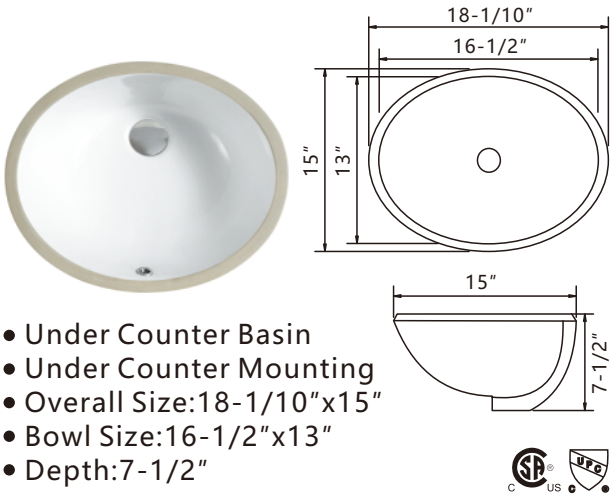

- Under Counter Basin
- Under Counter Mounting
- Overall Size:18-1/10″x15″
- Bowl Size:16-1/2″x13″
- Depth:7-1/2″

B-R1915U

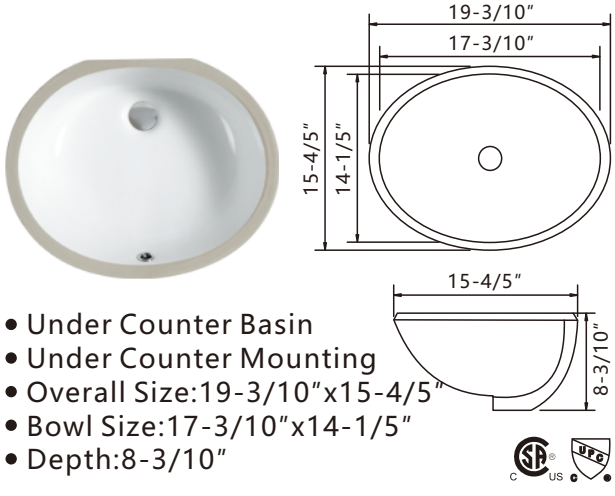

- Under Counter Basin
- Under Counter Mounting
- Overall Size:19-3/10″x15-4/5″
- Bowl Size:17-3/10″x14-1/5″
- Depth:8-3/10″

B-S1915U

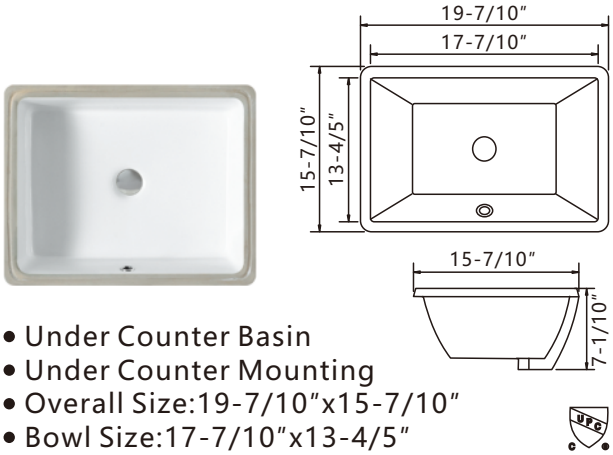

- Under Counter Basin
- Under Counter Mounting
- Overall Size:19-7/10″x15-7/10″
- Bowl Size:17-7/10″x13-4/5″
- Depth:7-1/10″

B-S2114U

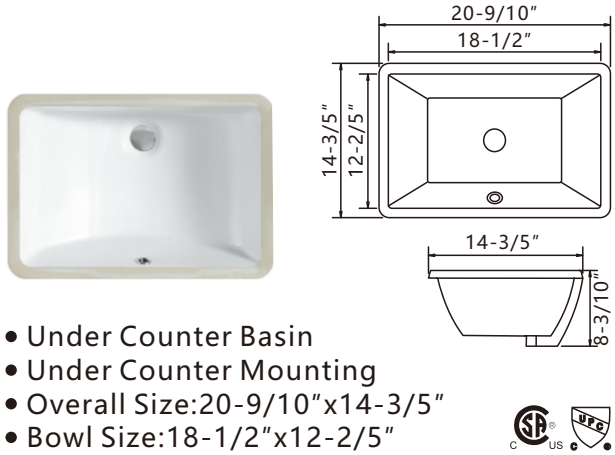

- Under Counter Basin
- Under Counter Mounting
- Overall Size:20-9/10″x14-3/5″
- Bowl Size:18-1/2″x12-2/5″
- Depth:8-3/10″

Drain, Metal Support Not Included

B-S2015U



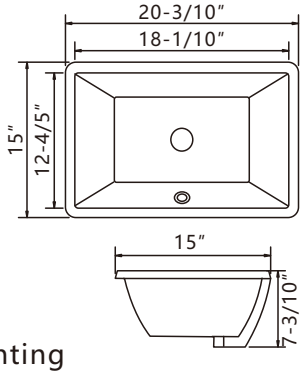

- Under Counter Basin
- Under Counter Mounting
- Overall Size:20-3/10″x15″
- Bowl Size:18-1/10″x12-4/5″
- Depth:7-3/10″

B-S2016



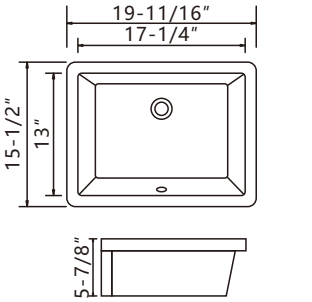

- Under Counter Basin
- Under Counter Mounting
- Overall Size:19-11/16″x15-1/2″
- Bowl Size:17-1/4″x13″
- Depth:5-7/8″

B-S2216



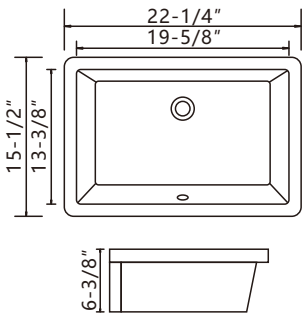

- Under Counter Basin
- Under Counter Mounting
- Overall Size:22-1/4″x15-1/2″
- Bowl Size:19-5/8″x13-3/8″
- Depth:6-3/8″

B-S1612U



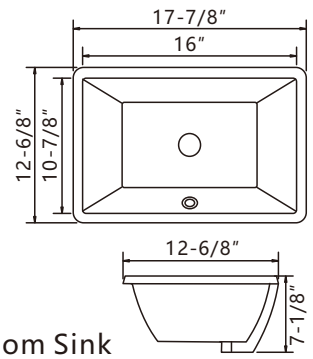

- Undermount Bathroom Sink
- Overall Size:17-7/8″x12-6/8″
- Bowl Size:16″x10-7/8″
- Depth:7-1/8″

B-R1818T



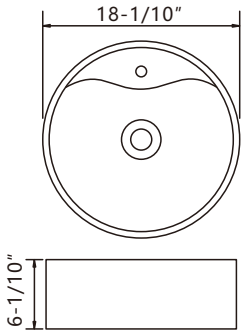

- Above Counter Basin
- Above Counter Mounting
- Overall Size:18-1/10″x18-1/10″
- Depth:6-1/10″

B-S2016T



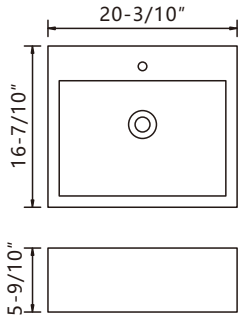

- Above Counter Basin
- Above Counter Mounting
- Overall Size:20-3/10″x16-7/10″
- Depth:5-9/10″

Drain, Metal Support Not Included

posheen™

B-R1515T



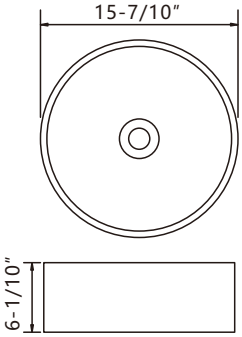

- Above Counter Basin
- Above Counter Mounting
- Overall Size:15-7/10″x15-7/10″
- Depth:6-1/10″

B-S1814T



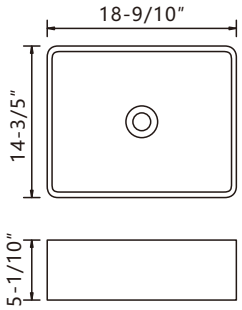

- Above Counter Basin
- Above Counter Mounting
- Overall Size:18-9/10″x14-3/5″
- Depth:5-1/10″

B-R2017T



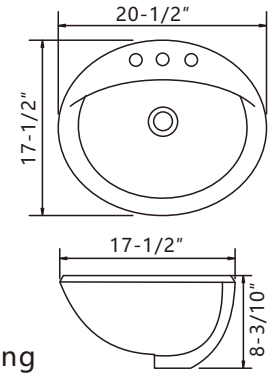

- Above Counter Basin
- Above Counter Mounting
- Overall Size:20-1/2″x17-1/2″
- Depth:8-3/10″

B-S1616T



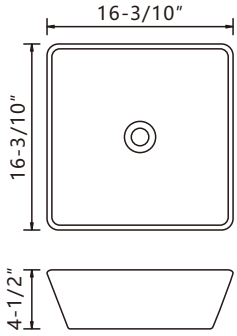

- Above Counter Basin
- Above Counter Mounting
- Overall Size:16-3/10″x16-3/10″
- Depth:4-1/2″

B-R1616T



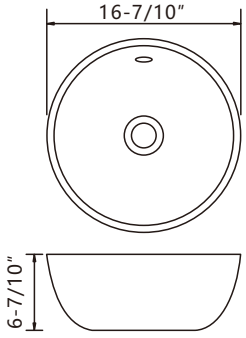

- Above Counter Basin
- Above Counter Mounting
- Overall Size:16-7/10″x16-7/10″″
- Depth:6-7/10″

Drain, Metal Support Not Included

NOV. 2025