Krafter's Land

Framed Cabinet

Krafter's Land

One-stop shop for a kitchen or bath remodel.

1201 Andover Park E, Suite 103, Tukwila WA 98188

206-809-6339 info@kraftersland.com

We truly believe that having a kitchen both functional and aesthetic is the dream for most homeowners and even those living in rental spaces. At Krafter's Land, our mission is to improve the living quality of our customers' life through intelligent designs and durable products.

Krafter's Land Cabinetry Inc was founded in Seattle, USA in 2020, and our goal is growing into one of the largest international kitchen remodel suppliers. As a leading supplier, we will have numerous manufacturing distributors across the whole country. By developing one of the largest wholesaling networks to provide the fastest supply turnaround time for all customers.

We are fully committed to working with all customers to satisfy their needs and exceed their expectations. Krafter's Land focuses on providing an affordable solution for your kitchen and bath remodeling needs by selling top notch products and providing excellent customer service.

Our products include cabinets, quartz stones, flooring, shower door, mosaic, faucets and sinks etc. Over the years, we've built trust with our customers because we reflect the craftsmanship and quality in our brand product that we would want in our own homes. We continually strive to strengthen that confidence in all products.

Cabinet Warranty
5-Year Limited

Krafter’s Land Cabinetry, Inc warrants to the original consumer purchaser that cabinetry,door hinges, and drawer glides will be free from defects in material and workmanship under normal use and service for a period of 5 years from purchase date (Proof of Purchase is required).This warranty is extended to the original purchasing consumer only for use of the product within the United States and is not transferrable. No changes or modifications can be made to this warranty except by an officer of Krafter’s Land Cabinetry, Inc.

This warranty does not cover normal wear and tear, damage or defects caused by accidents, misuse, abuse, or lack of necessary maintenance; nor does it cover alteration, modification, improper installation, improper handling / storage, environmental conditions, nor any labor expenses.

Vendor, at our option, may elect to repair or replace with a functionally equivalent product any product covered by this warranty. Some replacement parts are subject to availability and may differ from original parts received. Return of defective product may be required for a replacement to be issued. Repair parts or replacement parts are at the expense of the vendor, but customer shall bear all other expenses.These expenses may include, but are not limited to, cost of removal and reinstallation of product, labor expenses, etc. Further, we reserve the right to modify or alter any Product design, specifications or materials without obligation to make similar changes to Products previously manufactured or sold by Us.

Just as no two trees are alike, no two pieces of wood are alike. The variation in colorand grain pattern in wood adds to its natural beauty and is not considered an imperfection. Environmental factors, including but not limited to artificial / natural light, moisture, cleaners, smoke, etc., may cause the darkening or mellowing of a cabinet over time. This is a natural process and can be expected. This warranty does not cover the natural aging or darkening / mellowing of wood color, the inherent growth characteristics of, or variation in wood.

No dealer, agent, contractor, or installer has any right to change or extend the above warranty. These warranty statements only, are the expressed warrants extended by Krafter's Land Cabinetry Inc. In lieu of any other warranties, this warranty shall constitute the entire liability of Krafter's Land Cabinetry Inc. All styles, finishes, hardware, and specifications are also subject to change without prior notice. Krafter's Land Cabinetry Inc. is not responsible for any typographical errors.

Wall Cabinet

- **1. Door:**Partial Overlay Cabinet Door. Solid wood rail and stile, MDF center core.
- **2. Hinge:** DTC fully concealed Six-Way adjustable soft-close hinges.
- **3. Bottom Panel:** ½”thick plywood.
- **4. Full-Depth shelf:** adjustable ¾”thick plywood with metal shelf pins.
- **5. Face Frame:** ¾”thick, 1 ½”wide solid wood.
- **6. Side panel:** ½”thick plywood with dovetail slide-on structure.
- **7. Back Panel:** ½”thick plywood.
- **8. Corner bracket:** Durable metal corner bracket to secure the cabinet box.

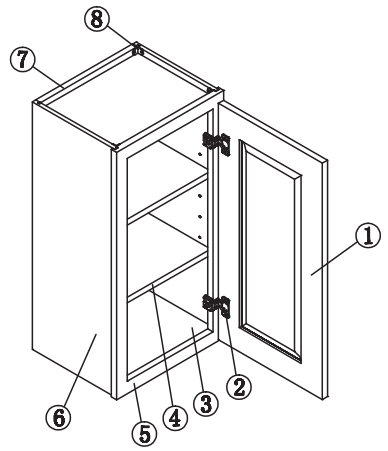

Base Cabinet

- **1. Door:** Solid wood rail and stile, MDF center core.
- **2. Hinge:** DTC fully concealed Six-Way adjustable soft-close hinges.
- **3. Bottom Panel:** ½” thick plywood.
- **4. 21”Depth shelf:** Adjustable ¾” thick plywood with metal shelf pins.
- **5. Face Frame:** ¾” thick, 1 ½” wide solid wood.
- **6. Toe Kick:** ½” thick plywood.
- **7. Side panel:** ½” thick plywood with dovetail slide-on structure.
- **8. Back Panel:** ½” thick plywood.
- **9. Corner bracket:** Durable metal corner bracket to secure the cabinet box.
- **10. Drawer glides:** Full extension six-way adjustable soft-close slides.
- **11. Drawer box:** 5/8” solid wood dovetailed drawer box.
- **12. Drawer Front:** Solid wood Drawer front.

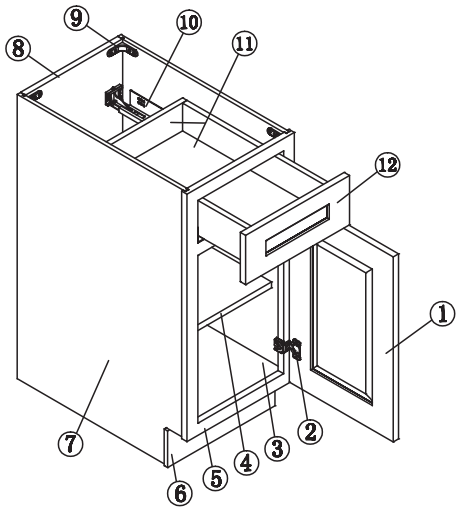

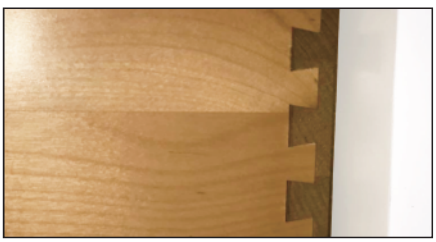





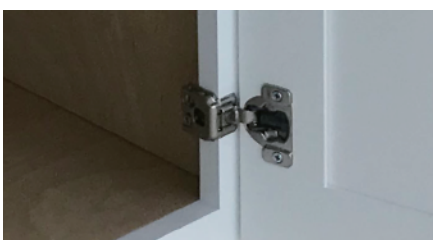





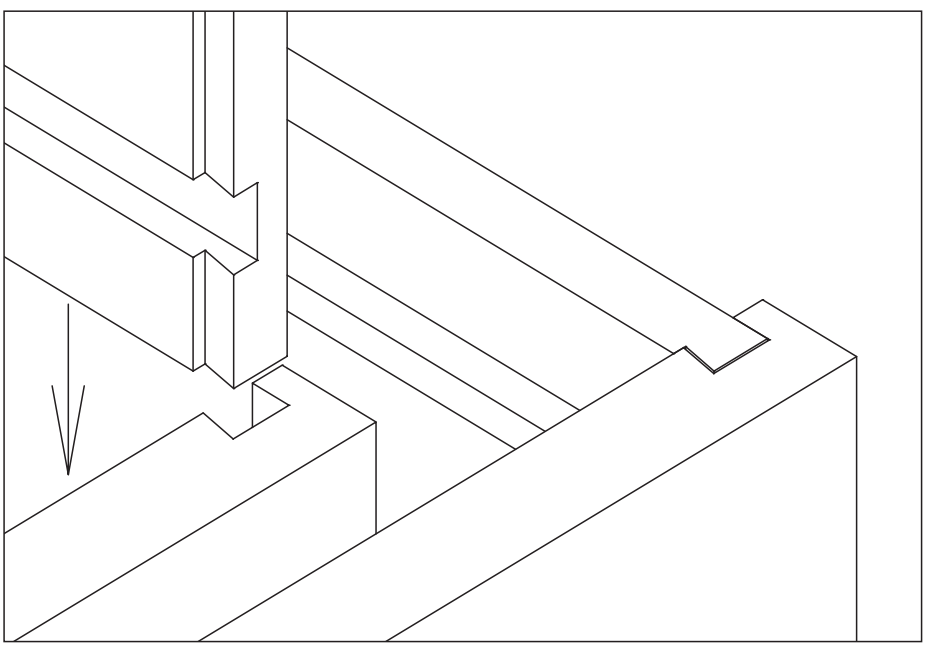

Krafter's Land
Cabinets | Stone | Flooring





TIMELESS ELEGANCE UNBEATABLE VALUE

Enduring Quality, Easy and Durable Structure, Smooth Finishing

Discover our new White Dove Shaker Framed Cabinets — the perfect blend of modern sophistication and lasting style. Engineered for quality and priced competitively, these cabinets offer a durable, classic look that never goes out of fashion. Ideal for contractors and dealers seeking premium, timeless cabinetry at a smart price. Elevate your projects with confidence and style that stands the test of time.

www.kraftersland.com



A. Door - 3/4” HDF door frame + 5/16” MDF center panel, 5-Pieces construction, Full overlay

B. Face Frame - 3/4” thickness × 1 1/2” width solid wood

C. Drawer Front - 3/4” HDF

D. Box Side Panel - Panel made of 1/2” thickness plywood

E. Box Bottom & Top Panel - Panel made of 1/2” thickness plywood

F. Box Back Panel - Panel made of 1/5” thickness plywood and 1/2” thickness frame

G. Ajustable Shelves - full depth panel made of 3/4” plywood

H. Drawer Box - 5/8”thickness solid wood with dovetail construction

I. Hinges - Six-way adjusted soft closing hinge

J. Glide - Full Extension Undermount Soft Closing Glide

K. Toe Kick - Panel made of 1/2” thickness plywood

Contact us

Krafter's Land Cabinetry Inc (Tukwila)

(206) 809-6339

Info@kraftersland.com

1201 Andover Park E Suite 103, Tukwila, WA 98188

Krafter's Land Cabinetry Inc (Tacoma)

(206) 866-0080

Tacoma@kraftersland.com

6818 Tacoma Mall Blvd, Tacoma, WA 98409

Krafter's Land Cabinetry Inc (lynnwood)

(425) 689-3660

Lynnwood@kraftersland.com

5710 196th St SW, Lynnwood, WA 98036

Base Cabinet Coding:

1. Standard base cabinets are 24″ deep & 34 ¼″ high.
2. Standard vanity base cabinets are 21″ deep & 34 ¼″ high.
3. Add door thickness for total depth.
4. All framed boxes are finished. No additional panels are needed for the exposed side.

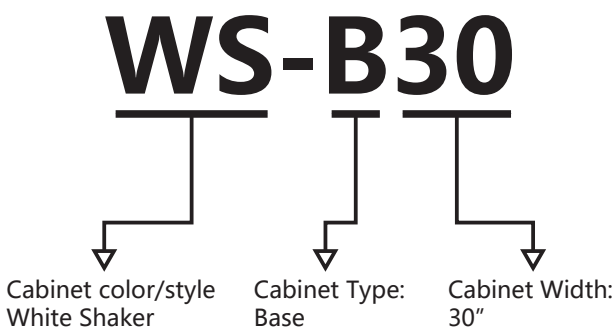

Wall Cabinet Coding:

1. Standard wall cabinets are 12″ deep.
2. Standard Refrigerator wall cabinets are 12″ or 24″ deep.
3. Add door thickness for total depth.
4. All framed boxes are finished. No additional panels are needed for the exposed side.

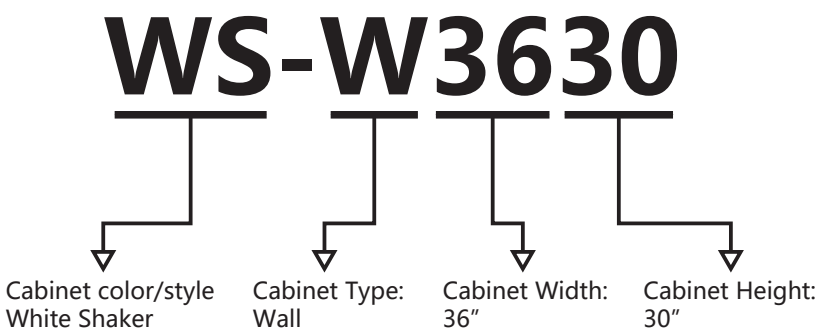

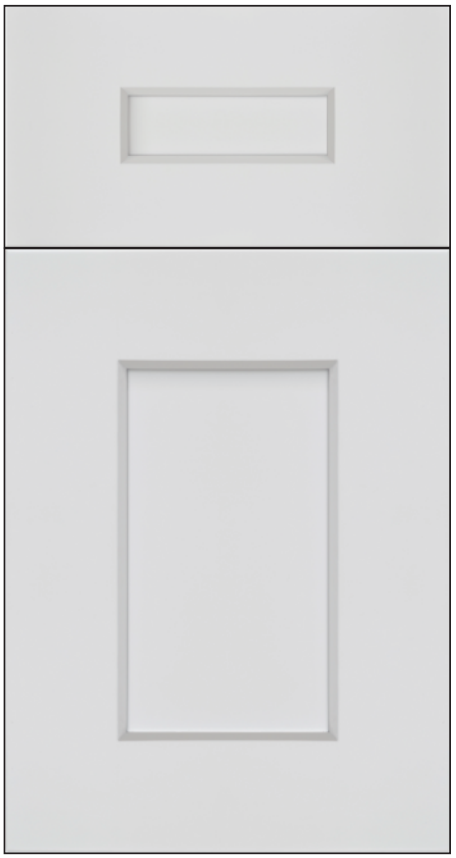

White Shaker (WS)



Blue Shaker (BS)

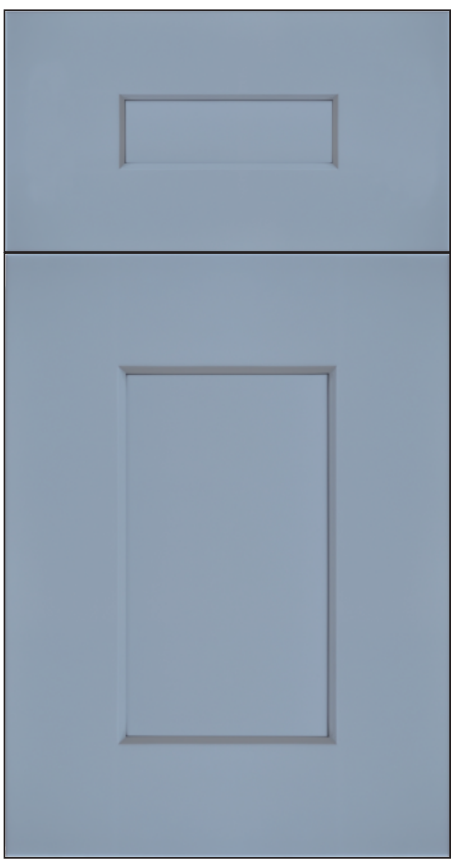

Grey Shaker (GS)



Espresso Shaker (ES)



Iron Shaker (IS)



Desert Cloud (DC)



Metallic White (MW)



Metallic Grey (MG)



Mega Sage (MS)



Natural Shaker (NS)



White Oak (KWO)



White Dove(WD)



Linen Pearl Shaker (LPS)



Harvest Oak Shaker (HOS)



Mocha Heritage Shaker (MHS)



Cedar Tone Shaker (CTS)



Lava Grey Shaker (LS)



Charcoal Shaker (CS)

Reserve only

posheen™

Base Full Door Cabinet

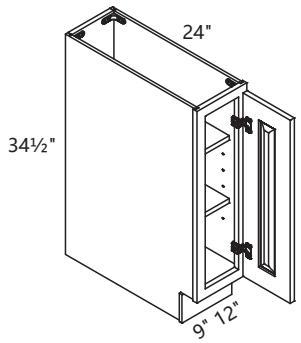

Item	W	H	D
B09FH	9	34½	24
B12FH	12	34½	24

Base Cabinet

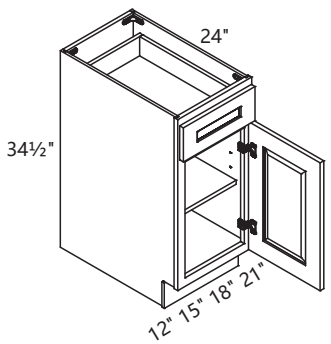

B12 , B15 , B18 , B21

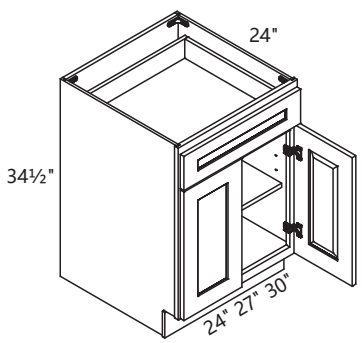

B24 , B27 , B30

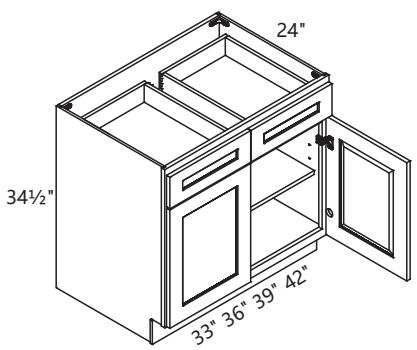

B33 , B36 , B39 , B42

Item	W	H	D
B12	12	34½	24
B15	15	34½	24
B18	18	34½	24
B21	21	34½	24
B24	24	34½	24
B27	27	34½	24
B30	30	34½	24
B33	33	34½	24
B36	36	34½	24
B39	39	34½	24
B42	42	34½	24

3-Drawers Base Cabinet

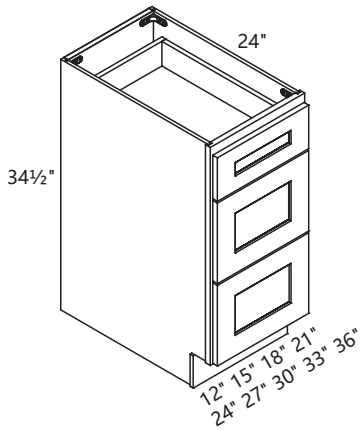

Item	W	H	D
3DB12	12	34½	24
3DB15	15	34½	24
3DB18	18	34½	24
3DB21	21	34½	24
3DB24	24	34½	24
3DB27	27	34½	24
3DB30	30	34½	24
3DB33	33	34½	24
3DB36	36	34½	24

Base Blind Corner Cabinet

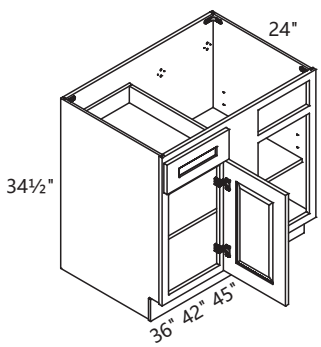

Item	W	H	D
BBC36	36	34½	24
BBC42	42	34½	24
BBC45	45	34½	24

Base Lazy Susan Cabinet

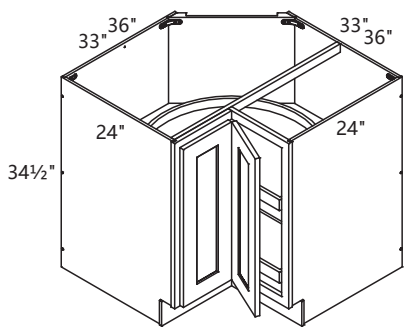

Item	W	H	D
BLS33	33	34½	24
BLS36	36	34½	24

posheen™

Diagonal Sink Base Cabinet

Item	W	H	D
DSB36	36	34½	24
DSB42	42	34½	24

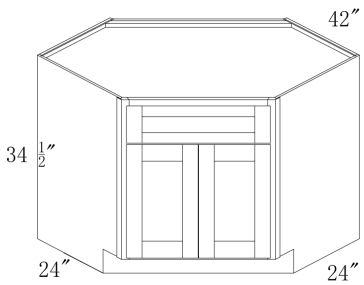

DBS42

Base Spice Rack Cabinet

Item	W	H	D
BSR09	9	34½	24

BSR09 metal drawer and door are pre-assembled with box.

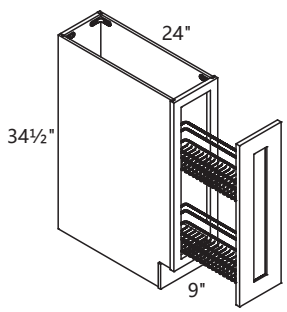

BSR09

BSR09-N	9	34½	24
BSR12	12	34½	24

BSR09-N BSR12 plywood drawer and door are pre-assembled with box.

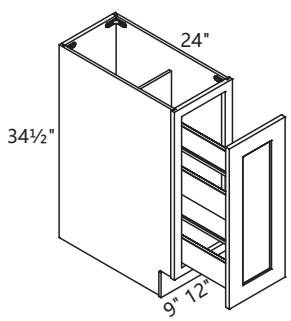

BSR09-N

BSR12

Base Waste Basket Cabinet

Item	W	H	D
BWB18-D	18	34½	24

BWB18-D pul-out metal drawer with two 20 quart waste bins.

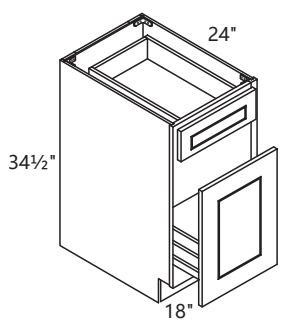

BWB18-D

BWB18-N	18	34½	24

BWB18-N pull-out wooden drawer with two 20 quart waste bins.

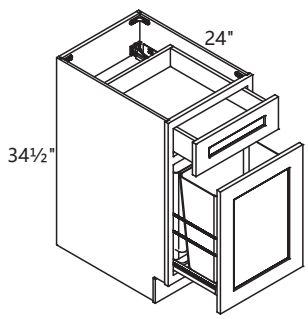

BWB18-N

Base Microwave Cabinet

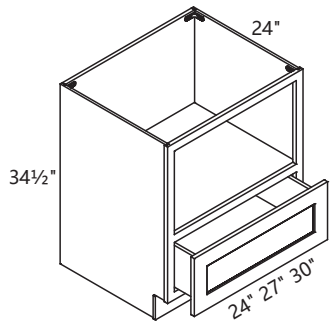

Item	W	H	D
BMC24	24	34½	24
BMC27	27	34½	24
BMC30	30	34½	24

Base Open End Cabinet

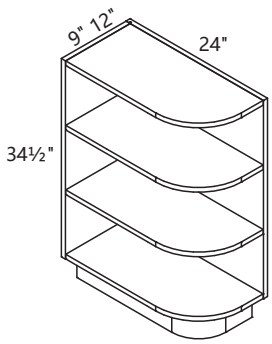

Item	W	H	D
BOE09	9	34½	24
BOE12	12	34½	24

Base End Corner Cabinet

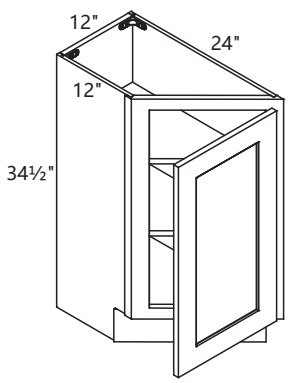

Item	W	H	D
BEC24-L	12	34½	24
BEC24-R	12	34½	24

posheen™

Pantry Cabinet

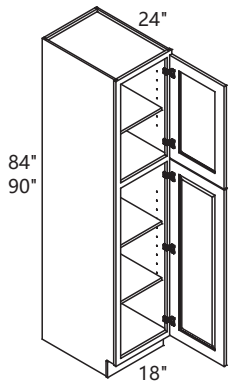

PC1884 , PC1890

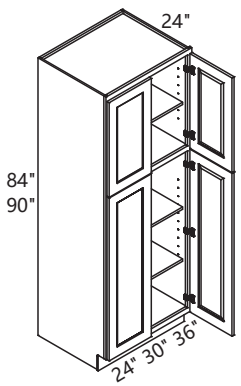

PC2484 , PC3084 , PC3684
PC2490 , PC3090 , PC3690

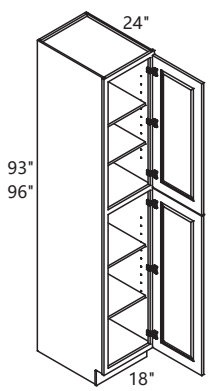

PC1893 , PC1896

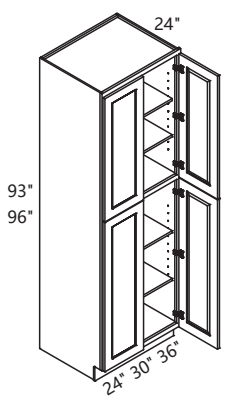

PC2493 , PC3093 , PC3693
PC2496 , PC3096 , PC3696

Item	W	H	D
PC1884	18	84	24
PC2484	24	84	24
PC3084	30	84	24
PC3684	36	84	24
PC1890	18	90	24
PC2490	24	90	24
PC3090	30	90	24
PC3690	36	90	24
PC1893	18	93	24
PC2493	24	93	24
PC3093	30	93	24
PC3693	36	93	24
PC1896	18	96	24
PC2496	24	96	24
PC3096	30	96	24
PC3696	36	96	24

Oven Cabinet

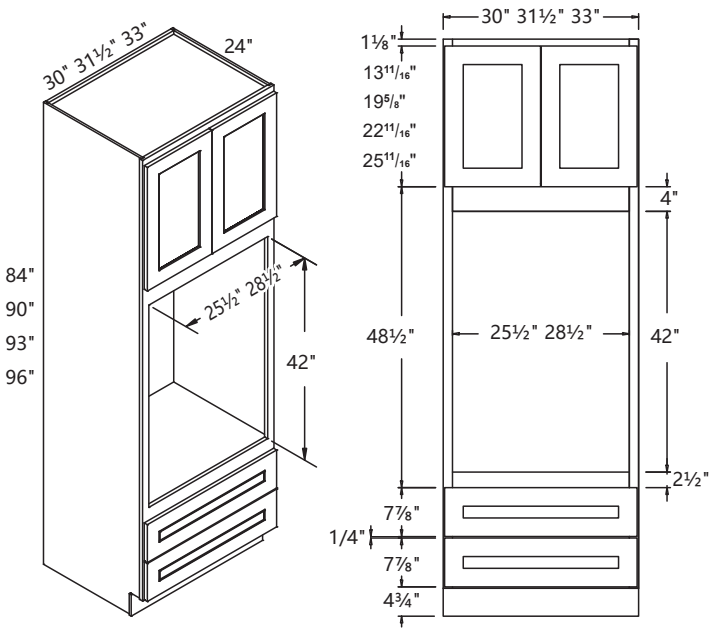

Item	W	H	D
OC3084	30	84	24
OC31.584	31½	84	24
OC3384	33	84	24
OC3090	30	90	24
OC31.590	31½	90	24
OC3390	33	90	24
OC31.593	31½	93	24
OC3096	30	96	24
OC31.596	31½	96	24
OC3396	33	96	24

Sink Base Cabinet

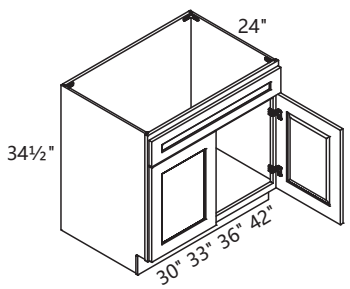

Item	W	H	D
SB30	30	34½	24
SB33	33	34½	24
SB36	36	34½	24
SB42	42	34½	24

Apron Sink Base Cabinet

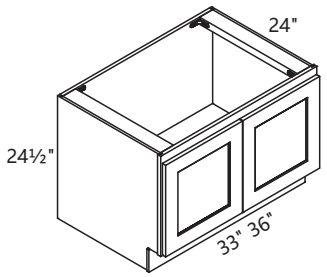

Item	W	H	D
FSB33-N	33	24½	24
FSB36-N	36	24½	24

posheen™

Wall Cabinet	Item	W	H	D
	W1212	12	12	12
	W1512	15	12	12
	W1812	18	12	12
	W2112	21	12	12
	W2412	24	12	12
	W2712	27	12	12
	W3012	30	12	12
	W3312	33	12	12
	W3612	36	12	12
	W1215	12	15	12
	W1515	15	15	12
	W1815	18	15	12
	W2115	21	15	12
	W2415	24	15	12
	W2715	27	15	12
	W3015	30	15	12
	W3315	33	15	12
	W3615	36	15	12
	W3018	30	18	12
	W3318	33	18	12
	W3618	36	18	12
	W3021	30	21	12
	W3321	33	21	12
	W3621	36	21	12

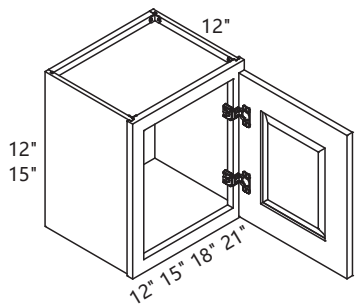

W1212 , W1512 , W1812 , W2112
W1215 , W1515 , W1815 , W2115

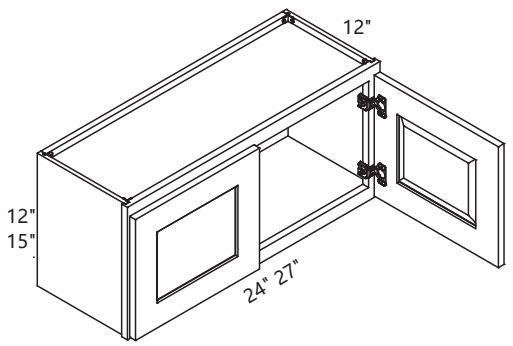

W2412 , W2712 , W2415 , W2715

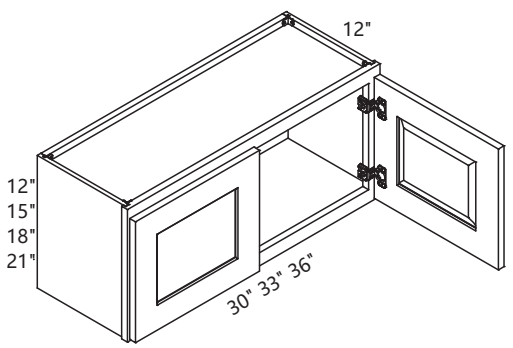

W3012 , W3312 , W3612 , W3015
W3315 , W3615 , W3018 , W3318
W3618 , W3021 , W3321 , W3621

Wall Cabinet

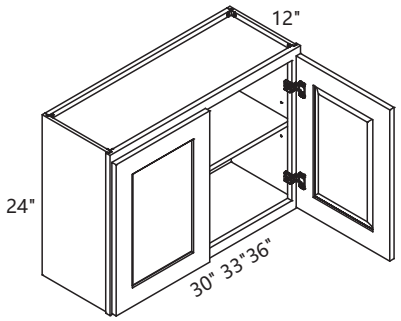

W3024 , W3324 , W3624

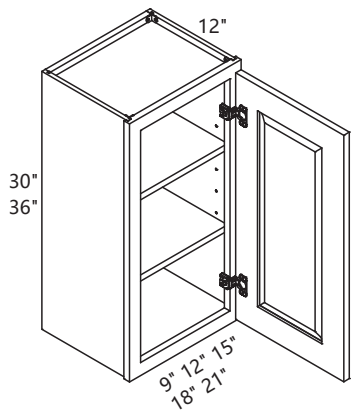

W0930 , W1230 , W1530 , W1830
W2130 , W0936 , W1236 , W1536
W1836 , W2136

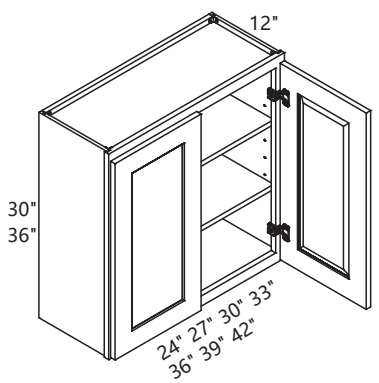

W2430 , W2730 , W3030 , W3330
W3630 , W3930 , W4230 , W2436
W2736 , W3036 , W3336 , W3636
W3936 , W4236

Item	W	H	D
W3024	30	24	12
W3324	33	24	12
W3624	36	24	12
W0930	9	30	12
W1230	12	30	12
W1530	15	30	12
W1830	18	30	12
W2130	21	30	12
W2430	24	30	12
W2730	27	30	12
W3030	30	30	12
W3330	33	30	12
W3630	36	30	12
W3930	39	30	12
W4230	42	30	12
W0936	9	36	12
W1236	12	36	12
W1536	15	36	12
W1836	18	36	12
W2136	21	36	12
W2436	24	36	12
W2736	27	36	12
W3036	30	36	12
W3336	33	36	12
W3636	36	36	12
W3936	39	36	12
W4236	42	36	12

posheen™

Wall Cabinet

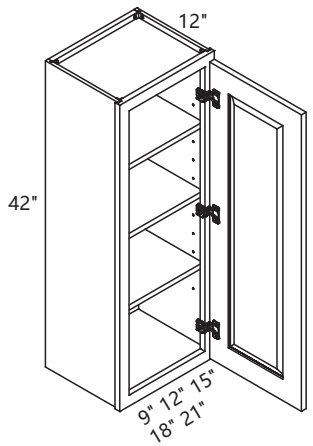

W0942 , W1242 , W1542
W1842 , W2142

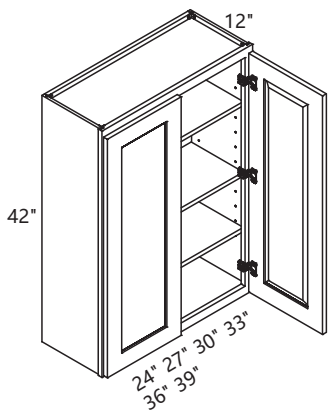

W2442 , W2742 , W3042
W3342 , W3642 , W3942

Item	W	H	D
W0942	9	42	12
W1242	12	42	12
W1542	15	42	12
W1842	18	42	12
W2142	21	42	12
W2442	24	42	12
W2742	27	42	12
W3042	30	42	12
W3342	33	42	12
W3642	36	42	12
W3942	39	42	12

Refrigerator Wall Cabinet

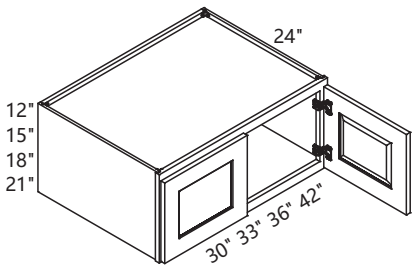

W301224 , W331224 , W361224
W421224 , W301524 , W331524
W361524 , W301824 , W331824
W361824 , W302124 , W332124
W362124

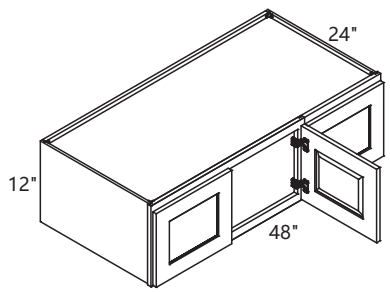

W481224

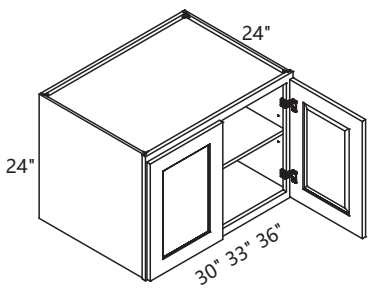

W302424 , W332424 , W362424

Item	W	H	D
W301224	30	12	24
W331224	33	12	24
W361224	36	12	24
W421224	42	12	24
W481224	48	12	24
W301524	30	15	24
W331524	33	15	24
W361524	36	15	24
W301824	30	18	24
W331824	33	18	24
W361824	36	18	24
W302124	30	21	24
W332124	33	21	24
W362124	36	21	24
W302424	30	24	24
W332424	33	24	24
W362424	36	24	24

Wall Diagonal Corner Cabinet

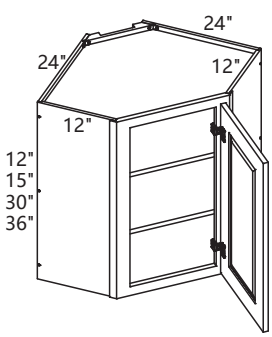

WDC2412 , WDC2415
WDC2430 , WDC2436

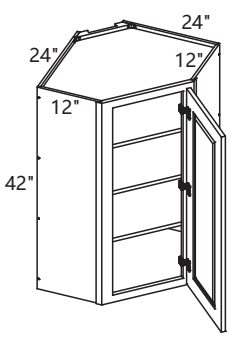

WDC2442

Item	W	H	D
WDC2412	24	12	12
WDC2415	24	15	12
WDC2430	24	30	12
WDC2436	24	36	12

WDC2442	24	42	12

Cabinet shelves are not available for any cabinet height below 24".

Wall Easy Reach Cabinet

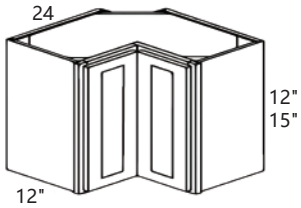

WER2412，WER2415，WER2412GD，WER2415GD

Item	W	H	D
WER2412	24	12	12
WER2415	24	15	12
WER2412GD	24	12	12
WER2415GD	24	15	12

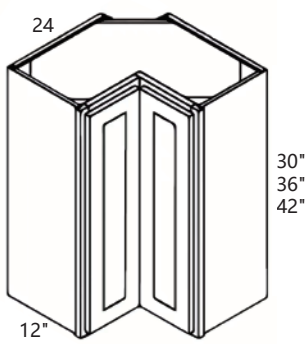

WER2430，WER2436，WER2442

WER2430	24	30	12
WER2436	24	36	12
WER2442	24	42	12

Wall Blind Corner Cabinet

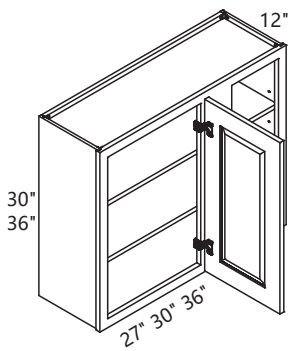

WBC2730，WBC3030，WBC3630
WBC2736，WBC3036，WBC3636

Item	W	H	D
WBC2730	27	30	12
WBC3030	30	30	12
WBC3630	36	30	12
WBC2736	27	36	12
WBC3036	30	36	12
WBC3636	36	36	12

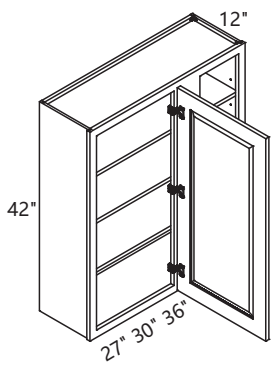

WBC2742，WBC3042，WBC3642

WBC2742	27	42	12
WBC3042	30	42	12
WBC3642	36	42	12

Wall Microwave Cabinet

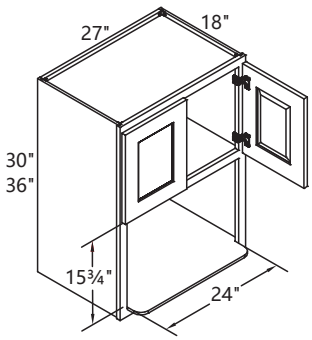

WMC2730 , WMC2736

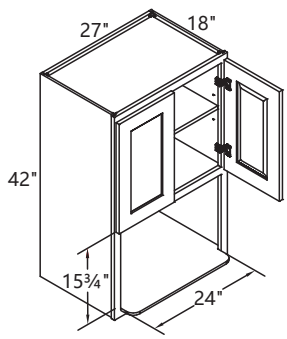

WMC2742

Item	W	H	D
WMC2730	27	30	18
WMC2736	27	36	18
WMC2742	27	42	18

Wall End Angle Cabinet

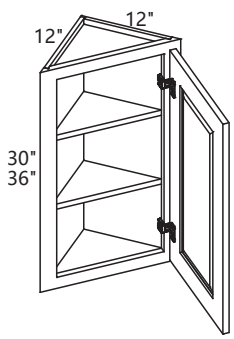

WEA1230 , WEA1236

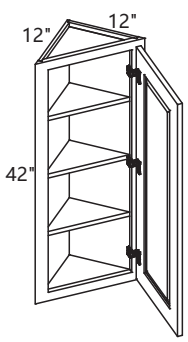

WEA1242

Item	W	H	D
WEA1230	12	30	12
WEA1236	12	36	12
WEA1242	12	42	12

posheen™

Range Hood Cover - KWO / DC

Item	W	H	D
RHC36	36	56	24½
RHC42	42	56	24½

White Oak / Desert Cloud

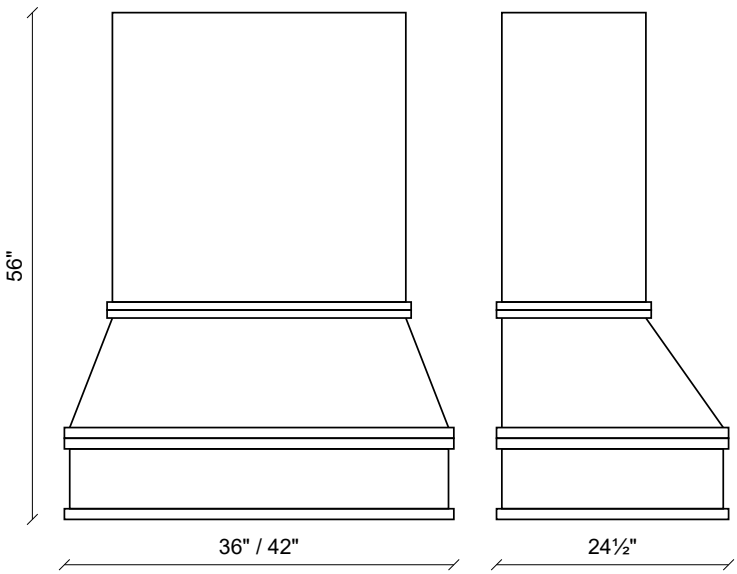

RHC36 , RHC42

Range Hood Cover - WS / NS

Item	W	H	D
RHC36	36	36	24
RHC42	42	36	24

White Shaker / Natural Shaker

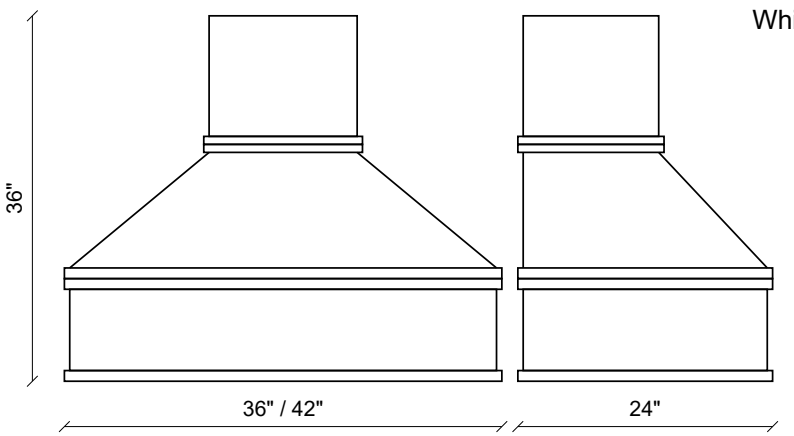

RHC36 , RHC42

Dimensions shown in inches; widths are nominal model sizes.

Refer to product drawings for exact dimensions.

posheen™

Wall End Shelves

Item	W	H	D
WES0930	9	30	12
WES0936	9	36	12

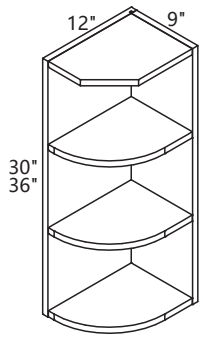

WES0930 , WES0936

WES0942	9	42	12

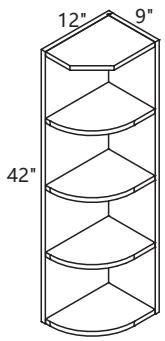

WES0942

Wall Wine Rack

Item	W	H	D
WR3018	30	18	12
WR3618	36	18	12

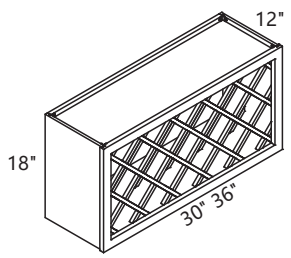

Stem Glass Holder

Item	W	D
SGH30	30	10⅜
SGH36	36	10⅜

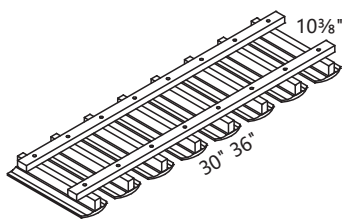

Wall Glass Cabinet

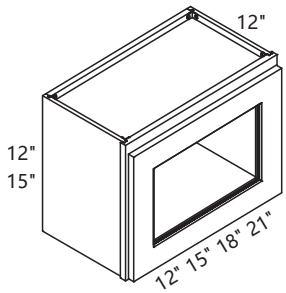

W1212GD , W1512GD , W1812GD
W2112GD , W1215GD , W1515GD
W1815GD , W2115GD

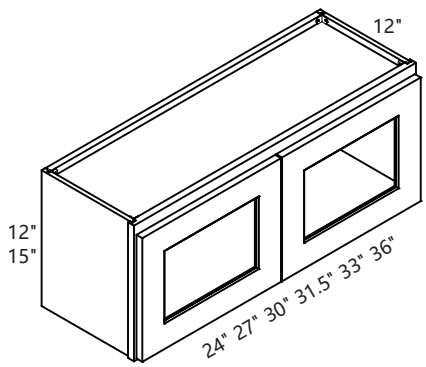

W2412GD, W2712GD, W3012GD
W31.512GD, W3312GD, W3612GD
W2415GD, W2715GD, W3015GD
W31.515GD, W3315GD, W3615GD

Item	W	H	D
W1212GD	12	12	12
W1512GD	15	12	12
W1812GD	18	12	12
W2112GD	21	12	12
W2412GD	24	12	12
W2712GD	27	12	12
W3012GD	30	12	12
W3312GD	33	12	12
W3612GD	36	12	12
W1215GD	12	15	12
W1515GD	15	15	12
W1815GD	18	15	12
W2115GD	21	15	12
W2415GD	24	15	12
W2715GD	27	15	12
W3015GD	30	15	12
W3315GD	33	15	12
W3615GD	36	15	12

posheen™

Wall Glass Cabinet

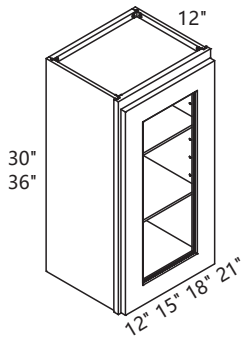

W1230GD , W1530GD , W1830GD , W2130GD
W1236GD , W1536GD , W1836GD , W2136GD

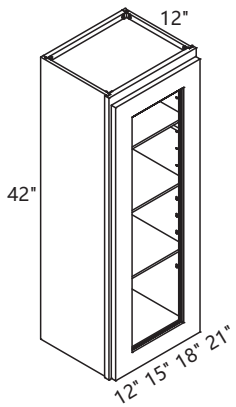

W1242GD , W1542GD , W1842GD , W2142GD

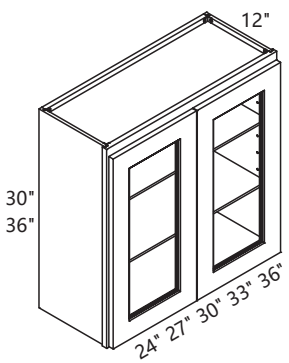

W2430GD , W2730GD , W3030GD
W3330GD , W3630GD , W2436GD
W2736GD , W3036GD , W3336GD
W3636GD

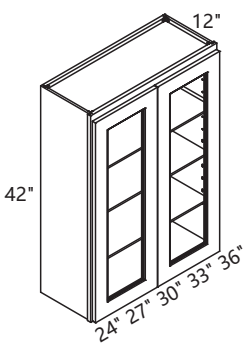

W2442GD , W2742GD , W3042GD
W3342GD , W3642GD

Item	W	H	D
W1230GD	12	30	12
W1530GD	15	30	12
W1830GD	18	30	12
W2130GD	21	30	12
W2430GD	24	30	12
W2730GD	27	30	12
W3030GD	30	30	12
W3330GD	33	30	12
W3630GD	36	30	12
W1236GD	12	36	12
W1536GD	15	36	12
W1836GD	18	36	12
W2136GD	21	36	12
W2436GD	24	36	12
W2736GD	27	36	12
W3036GD	30	36	12
W3336GD	33	36	12
W3636GD	36	36	12
W1242GD	12	42	12
W1542GD	15	42	12
W1842GD	18	42	12
W2142GD	21	42	12
W2442GD	24	42	12
W2742GD	27	42	12
W3042GD	30	42	12
W3342GD	33	42	12
W3642GD	36	42	12

Desert Cloud（DC） - glass door cabinet with wooden shelves; doors and cabinet body packed separately.

Wall Diagonal Corner Glass Cabinet

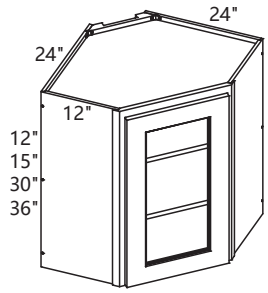

WDC2412GD , WDC2415GD
WDC2430GD , WDC2436GD

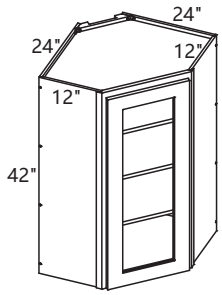

WDC2442GD

Item	W	H	D
WDC2412GD	24	12	12
WDC2415GD	24	15	12
WDC2430GD	24	30	12
WDC2436GD	24	36	12

WDC2442GD	24	42	12

Cabinet shelves are not available for any cabinet height less than 24".

Island End Box

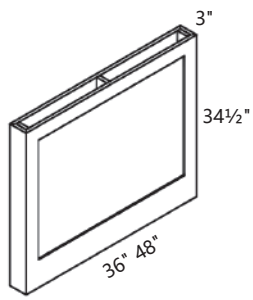

Item	W	H	D
IEB36	36	34½	3
IEB48	48	34½	3

Vanity 3-Drawers Base Cabinet

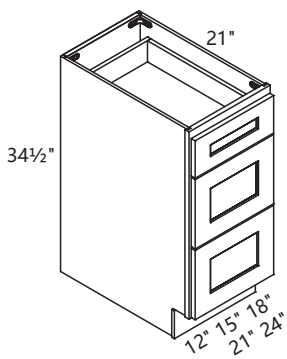

Item	W	H	D
VDB12-3	12	34½	21
VDB15-3	15	34½	21
VDB18-3	18	34½	21
VDB21-3	21	34½	21
VDB24-3	24	34½	21

posheen™

Vanity Sink Base Cabinet

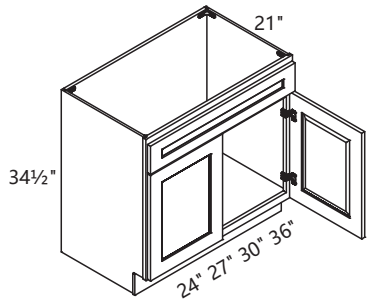

VSB24 , VSB27
VSB30 , VSB36

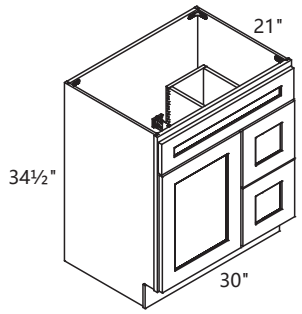

VSD30-L
VSD30-R

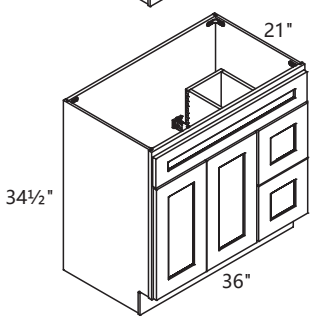

VSD36-L
VSD36-R

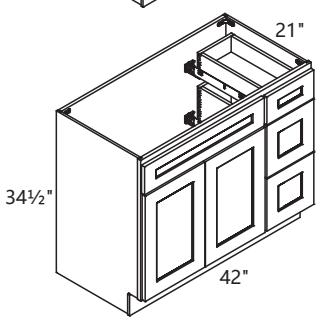

VSD42-L
VSD42-R

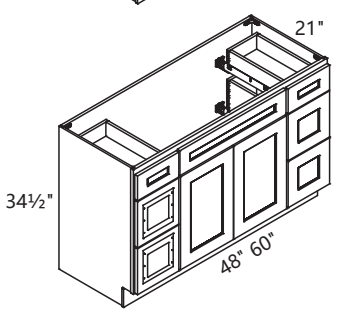

VSD48-6D
VSD60-6D

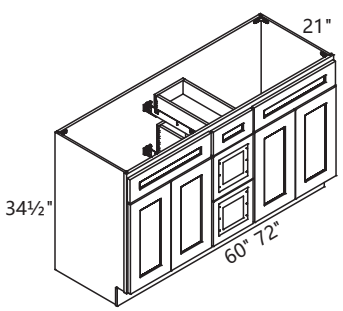

VSD60-3D
VSD72-3D

Item	W	H	D
VSB24	24	34½	21
VSB27	27	34½	21
VSB30	30	34½	21
VSB36	36	34½	21
VSD30-L	30	34½	21
VSD30-R	30	34½	21
VSD36-L	36	34½	21
VSD36-R	36	34½	21
VSD42-L	42	34½	21
VSD42-R	42	34½	21
VSD48-6D	48	34½	21
VSD60-6D	60	34½	21
VSD60-3D	60	34½	21
VSD72-3D	72	34½	21

L and R represent the position of the drawers.

Trim

Item	W	H	D
OCM8	3/4	96	3/4
SM8	3/4	96	1/4
TK8	4½	96	1/4
QR8	3/4	96	3/4

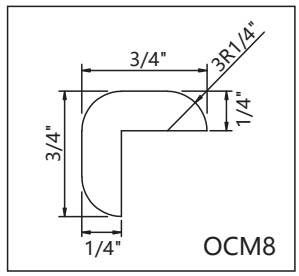

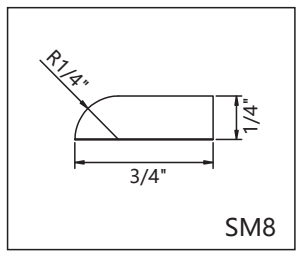

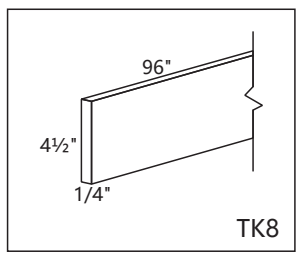

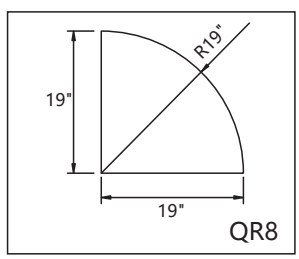

Base Cabinet Filler

Item	W	H	D
BF3	3	34½	3½
BFF3	3	34½	3½

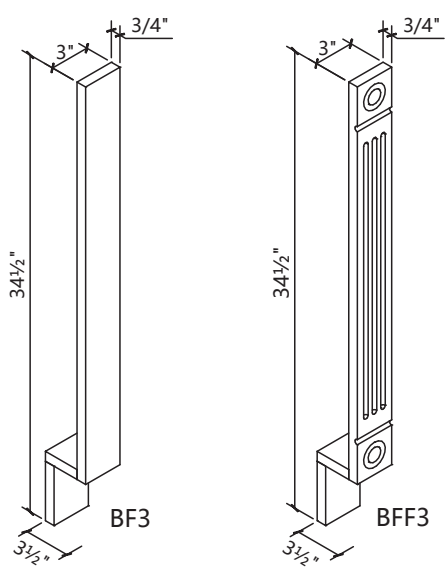

Wall Filler

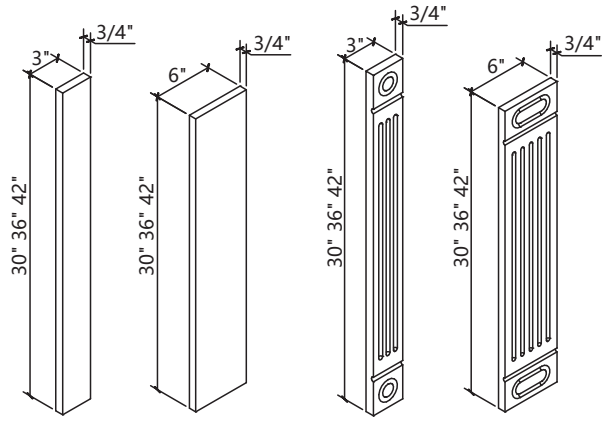

WF330
WF336
WF342

WF630
WF636
WF642

WFF330
WFF336
WFF342

WFF630
WFF636
WFF642

Item	W	H	D
WF330	3	30	3/4
WF336	3	36	3/4
WF342	3	42	3/4
WF630	6	30	3/4
WF636	6	36	3/4
WF642	6	42	3/4
WFF330	3	30	3/4
WFF336	3	36	3/4
WFF342	3	42	3/4
WFF630	6	30	3/4
WFF636	6	36	3/4
WFF642	6	42	3/4

Tall Filler

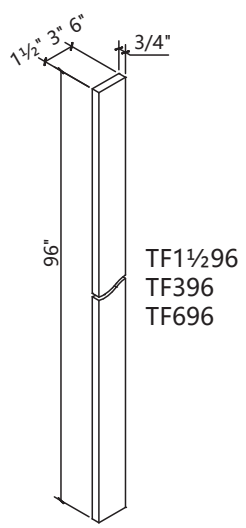

TF1½96
TF396
TF696

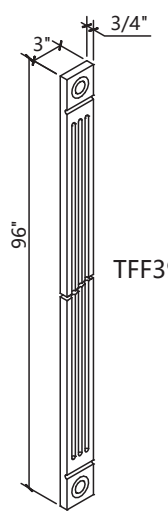

TFF396

Item	W	H	D
TF1.596	1½	96	3/4
TF396	3	96	3/4
TF696	6	96	3/4
TFF396	3	96	3/4

Post

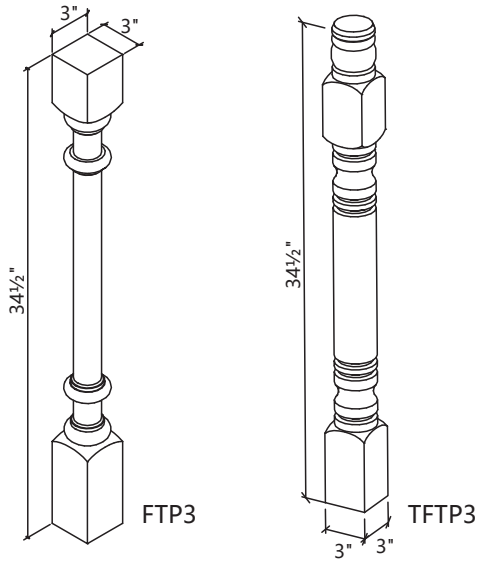

Item	W	H	D
FTP3	3	34½	3
TFTP3*	3	34½	3

The specifications marked with * need to be reserved.

Rosette Block

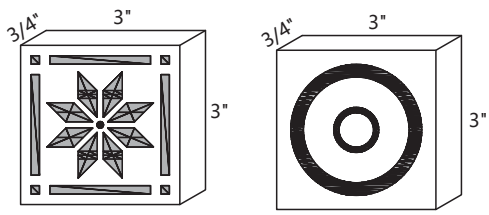

Item	W	H	D
R3(a)	3	3	3/4
R3(b)	3	3	3/4

Corbel

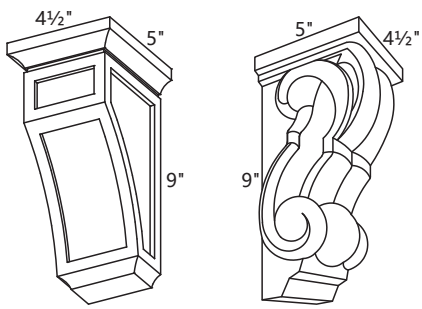

Item	W	H	D
MRC10	4½	9	5
GRC10	4½	9	5

Valance Raised Panel

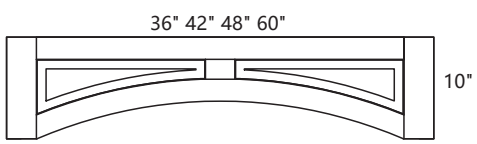

VRP36 , VRP42 , VRP48 , VRP60

Item	W	H
VRP36	36	10
VRP42	42	10
VRP48	48	10
VRP60	60	10

posheen™

Panel

Item	W	H	D
PNL96x34½x¼	96	34½	1/4
PNL96x48x¼	96	48	1/4
PNL96x48x½	96	48	1/2

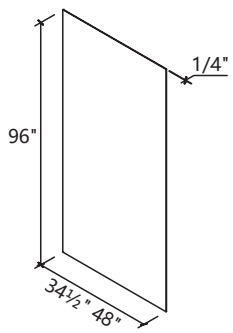

PNL96x34½x¼
PNL96x48x¼

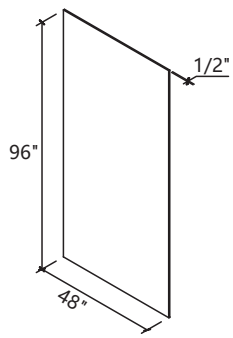

PNL96x48x½

Dishwasher End Panel

Item	W	H	D
DEP3	3	34½	24

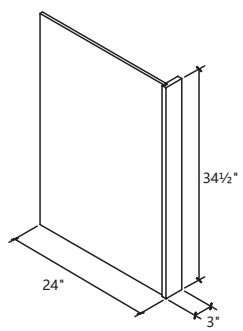

Refrigerator End Panel

Item	W	H	D
REP9624	1.5	96	24

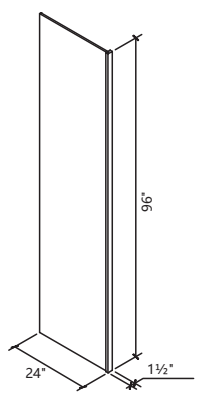

Moldings

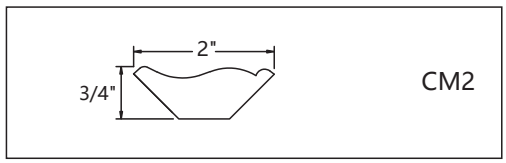

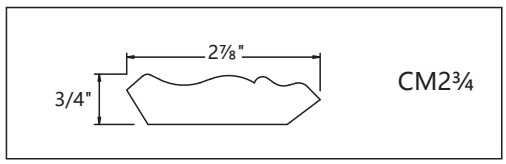

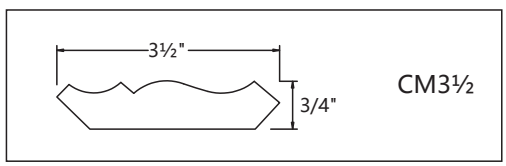

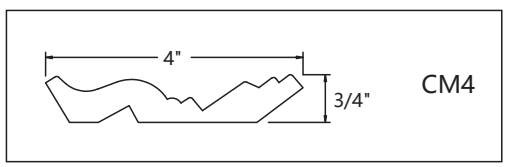

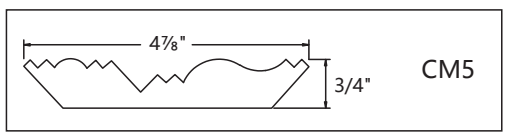

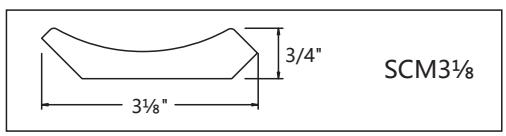

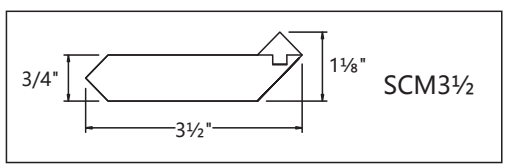

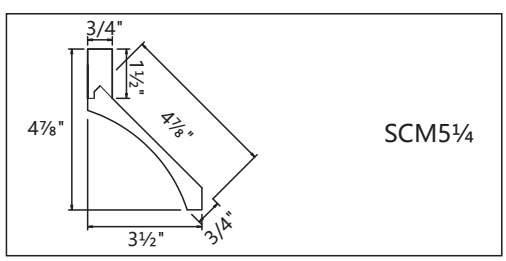

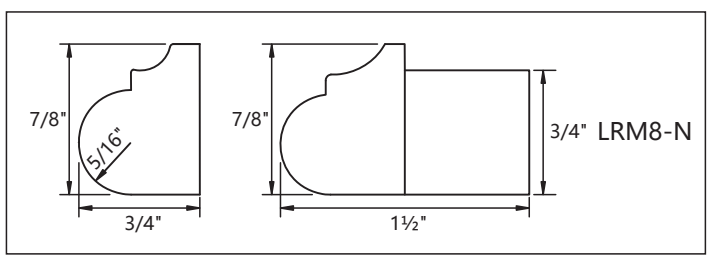

Item	W	H	D
CM2	2	96	3/4
CM2¾	2⅞	96	3/4
CM3½	3½	96	3/4
CM4	4	96	3/4
CM5	4⅞	96	3/4
SCM3⅛	3⅛	96	3/4
SCM3½	3½	96	1⅛
SCM5¼	4⅞	96	3½
LRM8-N	1½	96	7/8

posheen™

Wall Cabinet Dummy Door			
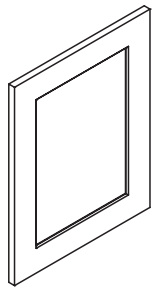	WDD1230	12	30
	WDD1236	12	36
	WDD1242	12	42

Base Cabinet Dummy Door	Item	W	H
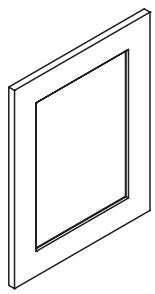	BDD24	24	34.5

Sample Door	Item	W	H
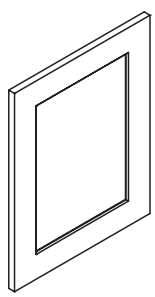	SD1215	12	15

Base Multifunctional Drawer

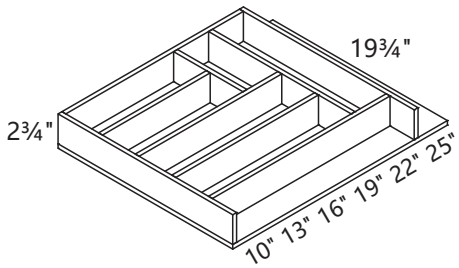

Item	W	H	D
BMD15	10	2¾	19¾
BMD18	13	2¾	19¾
BMD21	16	2¾	19¾
BMD24	19	2¾	19¾
BMD27	22	2¾	19¾
BMD30	25	2¾	19¾

Roll Out Tray

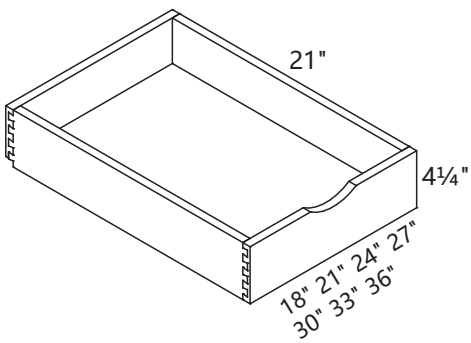

Item	W	H	D
ROT18	14⅜	4¼	21
ROT21	17⅜	4¼	21
ROT24	20⅜	4¼	21
ROT27	23⅜	4¼	21
ROT30	26⅜	4¼	21
ROT33	29⅜	4¼	21
ROT36	32⅜	4¼	21

Rot Support

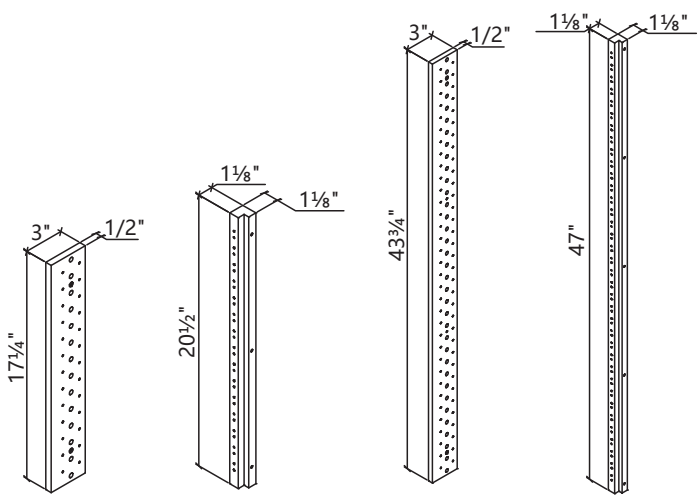

RBT17B RBT21F RPT43B RPT47F

Item	W	H	D
RBT17B	3	17¼	1/2
RBT21F	1⅛	20½	1⅛
RPT43B	3	43¾	1/2
RPT47F	1⅛	47	1⅛

NOV 2026