Krafter's Land

Slim Shaker Cabinets

Krafter's Land

One-stop shop for a kitchen or bath remodel.

1201 Andover Park E, Suite 103, Tukwila WA 98188

206-809-6339 info@kraftersland.com

We truly believe that having a kitchen both functional and aesthetic is the dream for most homeowners and even those living in rental spaces. At Krafter's Land, our mission is to improve the living quality of our customers' life through intelligent designs and durable products.

Krafter's Land Cabinetry Inc was founded in Seattle, USA in 2020, and our goal is growing into one of the largest international kitchen remodel suppliers. As a leading supplier, we will have numerous manufacturing distributors across the whole country. By developing one of the largest wholesaling networks to provide the fastest supply turnaround time for all customers.

We are fully committed to working with all customers to satisfy their needs and exceed their expectations. Krafter's Land focuses on providing an affordable solution for your kitchen and bath remodeling needs by selling top notch products and providing excellent customer service.

Our products include cabinets, quartz stones, flooring, shower door, mosaic, faucets and sinks etc. Over the years, we've built trust with our customers because we reflect the craftsmanship and quality in our brand product that we would want in our own homes. We continually strive to strengthen that confidence in all products.

Cabinet Warranty
5-Year Limited

Krafter's Land Cabinetry, Inc warrants to the original consumer purchaser that cabinetry,door hinges, and drawer glides will be free from defects in material and workmanship under normal use and service for a period of 5 years from purchase date (Proof of Purchase is required).This warranty is extended to the original purchasing consumer only for use of the product within the United States and is not transferrable. No changes or modifications can be made to this warranty except by an officer of Krafter's Land Cabinetry, Inc.

This warranty does not cover normal wear and tear, damage or defects caused by accidents, misuse, abuse, or lack of necessary maintenance; nor does it cover alteration, modification, improper installation, improper handling / storage, environmental conditions, nor any labor expenses.

Vendor, at our option, may elect to repair or replace with a functionally equivalent product any product covered by this warranty. Some replacement parts are subject to availability and may differ from original parts received. Return of defective product may be required for a replacement to be issued. Repair parts or replacement parts are at the expense of the vendor, but customer shall bear all other expenses.These expenses may include, but are not limited to, cost of removal and reinstallation of product, labor expenses, etc. Further, we reserve the right to modify or alter any Product design, specifications or materials without obligation to make similar changes to Products previously manufactured or sold by Us.

Just as no two trees are alike, no two pieces of wood are alike. The variation in colorand grain pattern in wood adds to its natural beauty and is not considered an imperfection. Environmental factors, including but not limited to artificial / natural light, moisture, cleaners, smoke, etc., may cause the darkening or mellowing of a cabinet over time. This is a natural process and can be expected. This warranty does not cover the natural aging or darkening / mellowing of wood color, the inherent growth characteristics of, or variation in wood.

No dealer, agent, contractor, or installer has any right to change or extend the above warranty. These warranty statements only, are the expressed warrants extended by Krafter's Land Cabinetry Inc. In lieu of any other warranties, this warranty shall constitute the entire liability of Krafter's Land Cabinetry Inc. All styles, finishes, hardware, and specifications are also subject to change without prior notice. Krafter's Land Cabinetry Inc. is not responsible for any typographical errors.

Wall Cabinet

- **1. Door:** ¾"HDF Board core door panel. (Only SNA stiles and rails are solid wood.)
- **2. Side Panel:** ¾" thick plywood side panel.
- **3. Back Panel:** ¾+¼" thick plywood back panel.
- **4. Screw Fastening System:** Stronger and more durable, ideal for long-term use and high-quality cabinets.
- **5. Full-Depth shelf:** adjustable ¾" thick plywood with metal shelf pins.
- **6. Hinge:** DTC fully concealed Six-Way adjustable soft-close hinges.

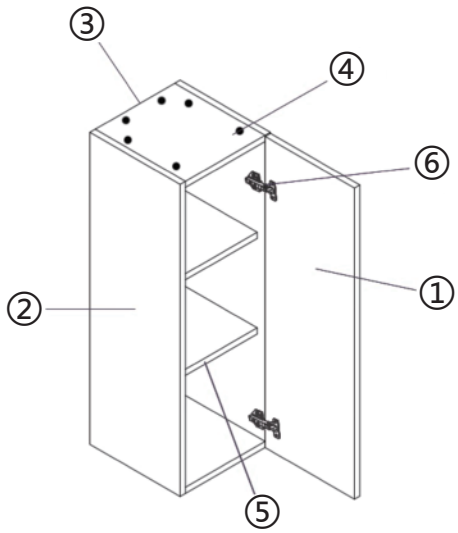

Base Cabinet

- **1. Door:** ¾" HDF Board core door panel. (Only SNA stiles and rails are solid wood.)
- **2. Side Panel:** ¾" thick plywood side panel.
- **3. Back Panel:** ¾+¼" thick plywood back panel.
- **4. Drawer box:** ⅝" solid wood dovetailed drawer box.
- **5. Drawer glides:** Full extension six-way adjustable soft-close slides.
- **6. Screw Fastening System:** Stronger and more durable, ideal for long-term use and high-quality cabinets.
- **7. 21" Depth shelf:** Adjustable ¾" thick plywood with metal shelf pins.
- **8. Hinge:** DTC brand six-way adjustable soft-close hinge.
- **9. Toe Kick:** ¾" thick plywood.

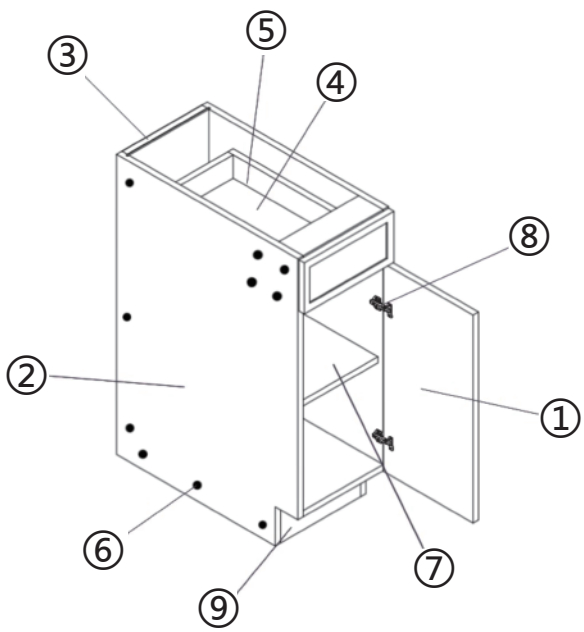

Base Cabinet Coding:

1. Standard base cabinets are 24″ deep & 34 ¼″ high.
2. Standard vanity base cabinets are 21″ deep & 34 ¼″ high.
3. Add door thickness for total depth.
4. Additional panels are needed for the exposed side and toe kick.
5. Cabinet Box and Cabinet Door/Drawer are packed separately.

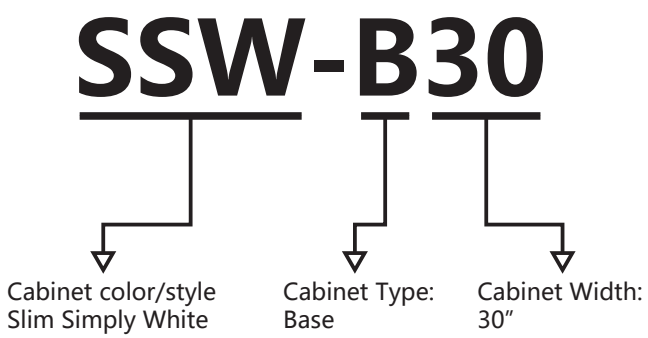

Wall Cabinet Coding:

1. Standard wall cabinets are 12″ deep.
2. Standard Refrigerator wall cabinets are 12″ or 24″ deep.
3. Add door thickness for total depth.
4. Additional panels are needed for the exposed side.
5. Cabinet Box and Cabinet Door/Drawer are packed separately.

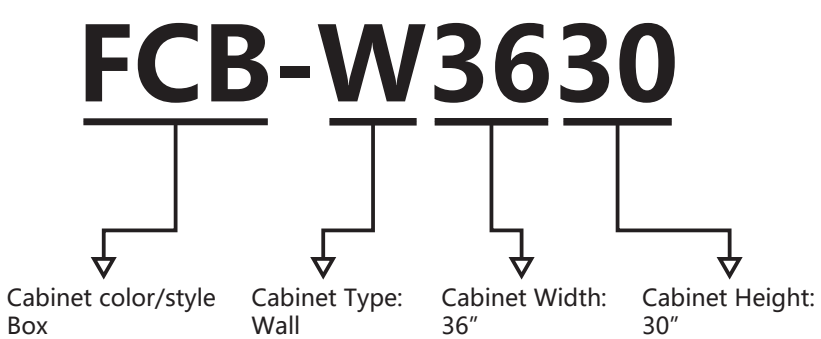

Slim Simply White (SSW)

Slim Pine Green (SPG)

Slim Natural Ash (SNA)

Slim Night Blue (SNB)

Slim Cold Black (SCB)

Base Full Door Cabinet

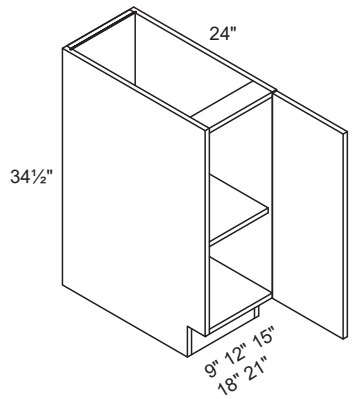

B09FD
B12FD
B15FD
B18FD
B21FD

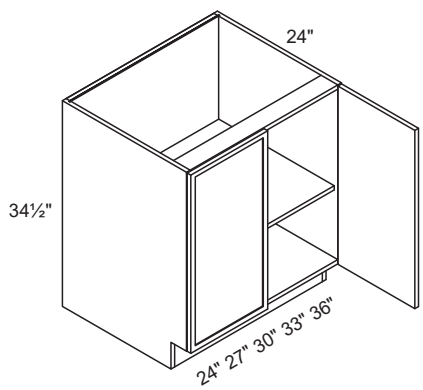

B24FD
B27FD
B30FD
B33FD
B36FD

Item	W	H	D
B09FD	9	34½	24
B12FD	12	34½	24
B15FD	15	34½	24
B18FD	18	34½	24
B21FD	21	34½	24
B24FD	24	34½	24
B27FD	27	34½	24
B30FD	30	34½	24
B33FD	33	34½	24
B36FD	36	34½	24

Base Cabinet

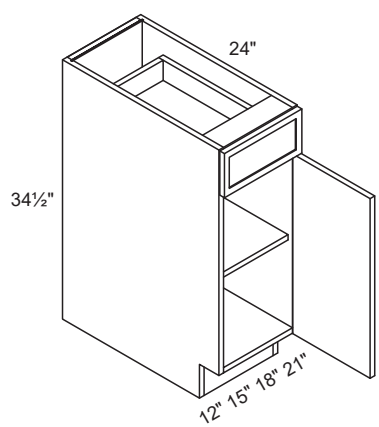

B12
B15
B18
B21

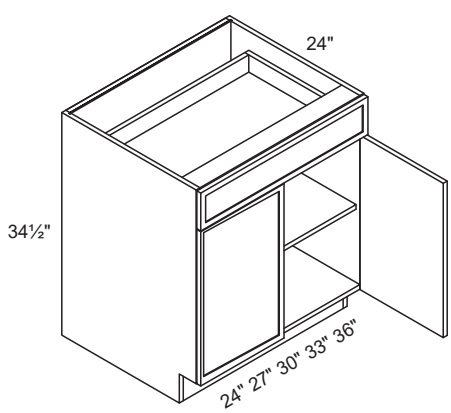

B24
B27
B30
B33
B36

Item	W	H	D
B12	12	34½	24
B15	15	34½	24
B18	18	34½	24
B21	21	34½	24
B24	24	34½	24
B27	27	34½	24
B30	30	34½	24
B33	33	34½	24
B36	36	34½	24

Drawer hardware is included in BOX.

2-Drawers Base Cabinet

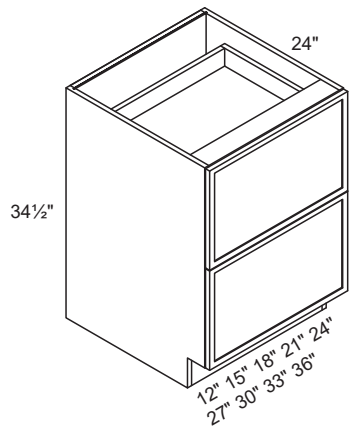

Item	W	H	D
2DB12	12	34½	24
2DB15	15	34½	24
2DB18	18	34½	24
2DB21	21	34½	24
2DB24	24	34½	24
2DB27	27	34½	24
2DB30	30	34½	24
2DB33	33	34½	24
2DB36	36	34½	24

Drawer hardware is included in BOX.

3-Drawers Base Cabinet

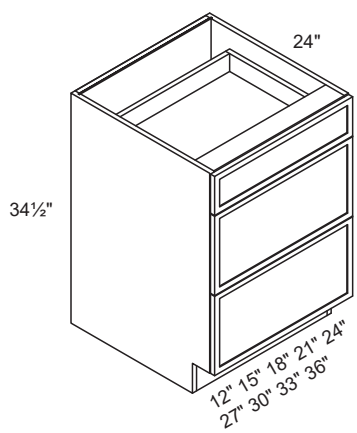

Item	W	H	D
3DB12	12	34½	24
3DB15	15	34½	24
3DB18	18	34½	24
3DB21	21	34½	24
3DB24	24	34½	24
3DB27	27	34½	24
3DB30	30	34½	24
3DB33	33	34½	24
3DB36	36	34½	24

Drawer hardware is included in BOX.

Base Microwave Cabinet

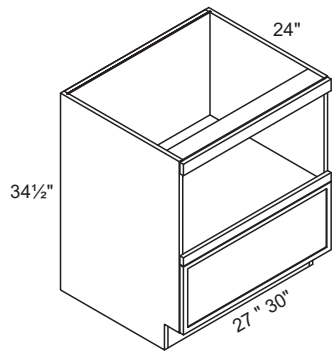

Item	W	H	D
BMC27	27	34½	24
BMC30	30	34½	24

Base Blind Corner Cabinet

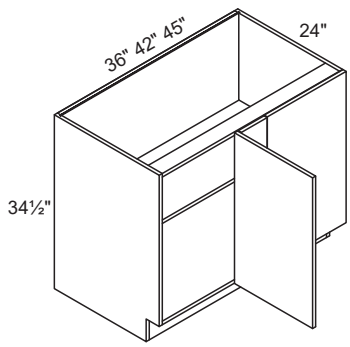

Item	W	H	D
BBC36-L	36	34½	24
BBC36-R	36	34½	24
BBC42-L	42	34½	24
BBC42-R	42	34½	24
BBC45-L	45	34½	24
BBC45-R	45	34½	24
BBC Swing Trays			

Fixed shelves are included in the box and swing tray is sold separately and can replace the fix shelves.

Base Lazy Susan Cabinet

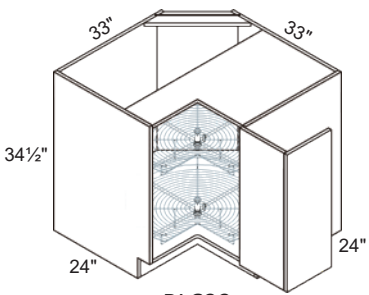

BLS33

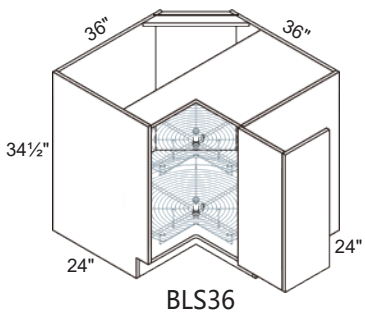

BLS36

Item	W	H	D
BLS33	33	34½	24
BLS36	36	34½	24
BLS33 Rotating Shelf			
BLS36 Rotating Shelf			

Fixed shelves are included in the box and rotating shelf is sold separately and can replace the fix shelves.

Base Spice Rack Cabinet

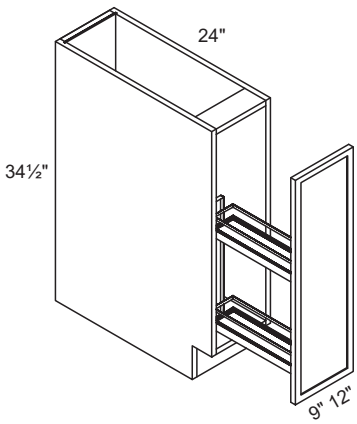

Item	W	H	D
BSR09	9	34½	24
BSR12	12	34½	24

Cabinet Shelf Mounted Spice Rack

Base Waste Basket Cabinet

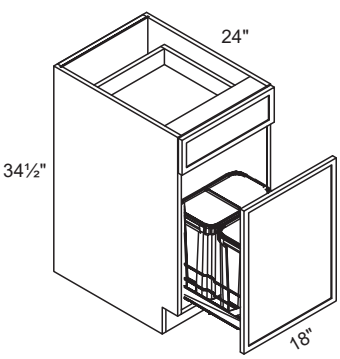

Item	W	H	D
BWB18-D	18	34½	24

BWB18 Waster Container

Sink Base Cabinet

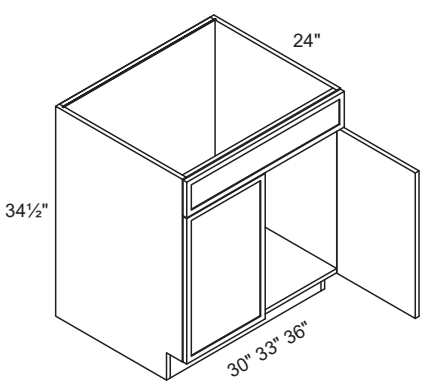

Item	W	H	D
SB30	30	34½	24
SB33	33	34½	24
SB36	36	34½	24

Apron Sink Base Cabinet

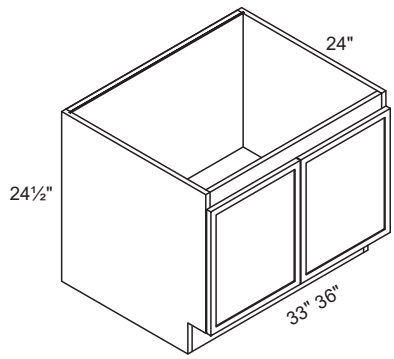

Item	W	H	D
FSB33-N	33	24½	24
FSB36-N	36	24½	24

Oven Cabinet

Item	W	H	D
OC3084	30	84	24
OC3090	30	90	24
OC3096	30	96	24

Drawer hardware is included in BOX.

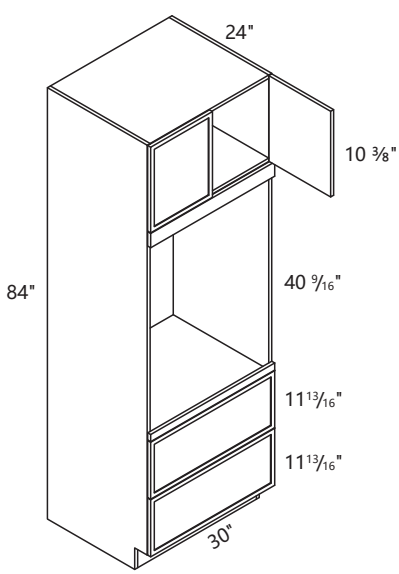

OC3084

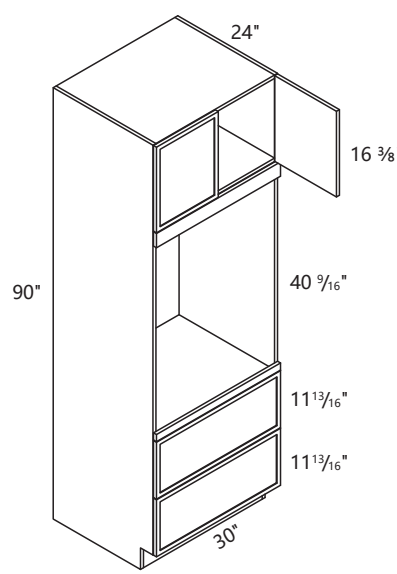

OC3090

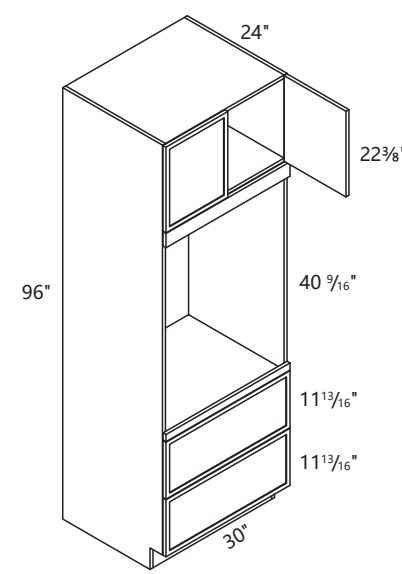

OC3096

posheen™

Pantry Cabinet

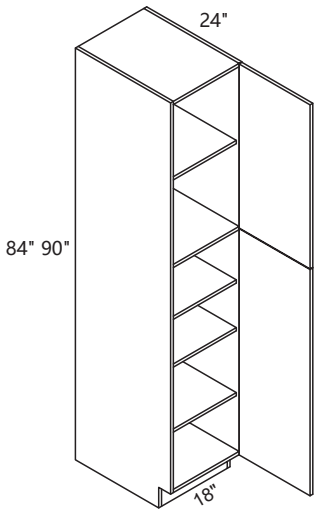

PC1884

PC1890

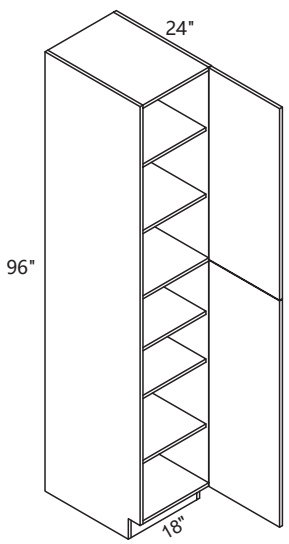

PC1896

Item	W	H	D
PC1884	18	84	24
PC2484	24	84	24
PC3084	30	84	24
PC3684	36	84	24
PC1890	18	90	24
PC2490	24	90	24
PC3090	30	90	24
PC3690	36	90	24
PC1896	18	96	24
PC2496	24	96	24
PC3096	30	96	24
PC3696	36	96	24

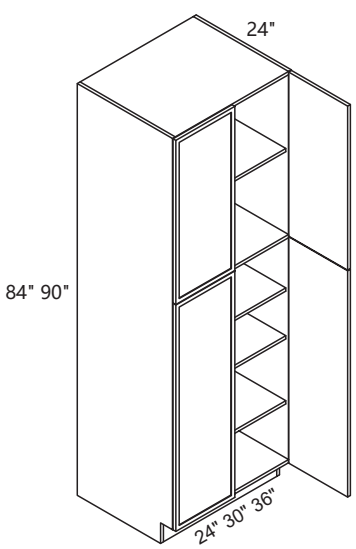

PC2484

PC3084

PC3684

PC2490

PC3090

PC3690

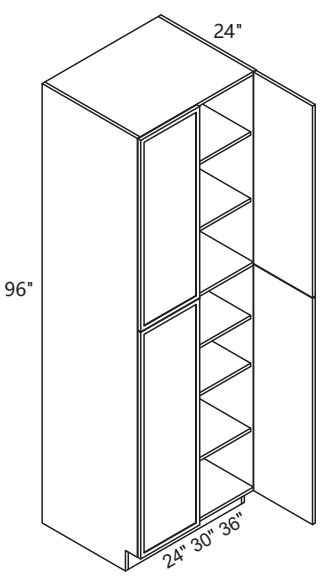

PC2496

PC3096

PC3696

posheen™

Wall Cabinet

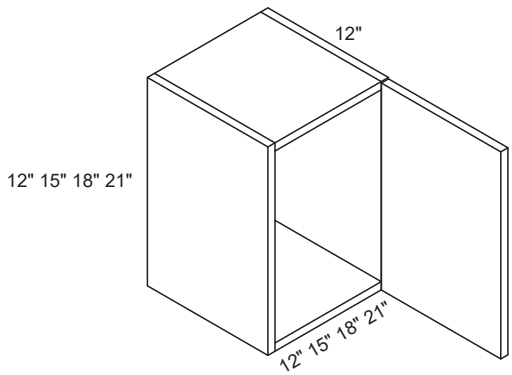

Item	W	H	D
W1212	12	12	12
W1512	15	12	12
W1812	18	12	12
W2112	21	12	12
W1215	12	15	12
W1515	15	15	12
W1815	18	15	12
W2115	21	15	12
W1218	12	18	12
W1518	15	18	12
W1818	18	18	12
W2118	21	18	12
W1221	12	21	12
W1521	15	21	12
W1821	18	21	12
W2121	21	21	12

posheen™

Wall Cabinet

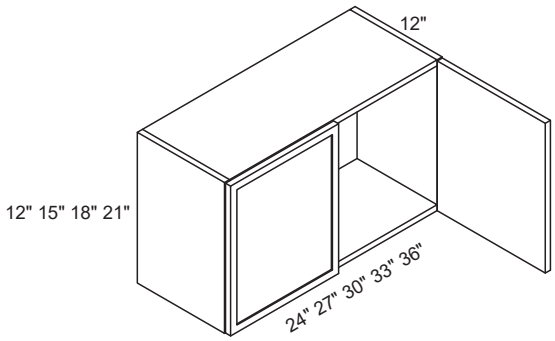

W2412 , W2712 , W3012 , W3312 , W3612
W2415 , W2715 , W3015 , W3315 , W3615
W2418 , W2718 , W3018 , W3318 , W3618
W2421 , W2721 , W3021 , W3321 , W3621

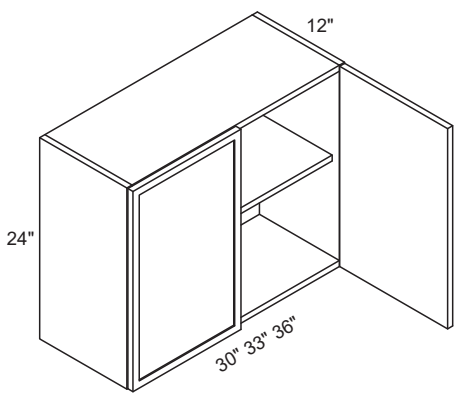

W3024 , W3324 , W3624

Item	W	H	D
W2412	24	12	12
W2712	27	12	12
W3012	30	12	12
W3312	33	12	12
W3612	36	12	12
W2415	24	15	12
W2715	27	15	12
W3015	30	15	12
W3315	33	15	12
W3615	36	15	12
W2418	24	18	12
W2718	27	18	12
W3018	30	18	12
W3318	33	18	12
W3618	36	18	12
W2421	24	21	12
W2721	27	21	12
W3021	30	21	12
W3321	33	21	12
W3621	36	21	12
W3024	30	24	12
W3324	33	24	12
W3624	36	24	12

Wall Cabinet

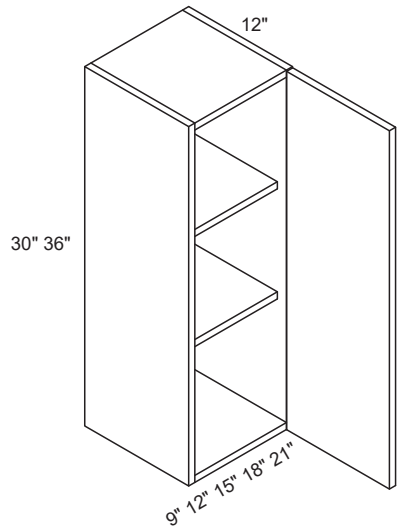

W0930
W1230
W1530
W1830
W2130
W0936
W1236
W1536
W1836
W2136

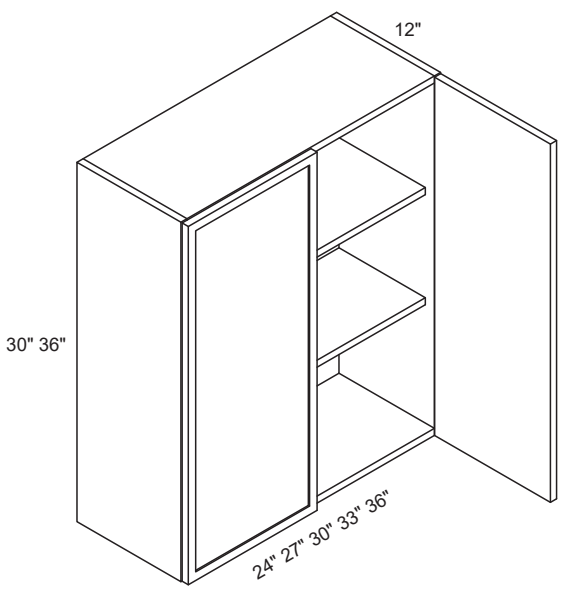

W2430
W2730
W3030
W3330
W3630
W2436
W2736
W3036
W3336
W3636

Item	W	H	D
W0930	9	30	12
W1230	12	30	12
W1530	15	30	12
W1830	18	30	12
W2130	21	30	12
W2430	24	30	12
W2730	27	30	12
W3030	30	30	12
W3330	33	30	12
W3630	36	30	12
W0936	9	36	12
W1236	12	36	12
W1536	15	36	12
W1836	18	36	12
W2136	21	36	12
W2436	24	36	12
W2736	27	36	12
W3036	30	36	12
W3336	33	36	12
W3636	36	36	12

posheen™

Wall Cabinet

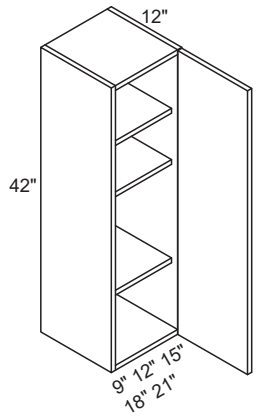

W0942
W1242
W1542
W1842
W2142

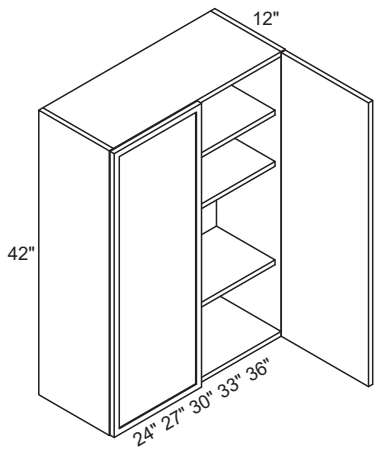

W2442
W2742
W3042
W3342
W3642

Item	W	H	D
W0942	9	42	12
W1242	12	42	12
W1542	15	42	12
W1842	18	42	12
W2142	21	42	12
W2442	24	42	12
W2742	27	42	12
W3042	30	42	12
W3342	33	42	12
W3642	36	42	12

Wall Cabinet

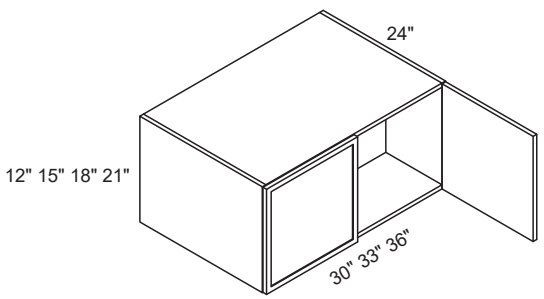

W301824
W302124
W331824
W332124
W361224
W361524
W361824
W362124

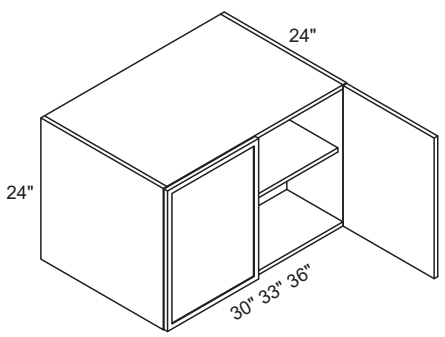

W302424
W332424
W362424

Item	W	H	D
W301224	30	12	24
W301824	30	18	24
W302124	30	21	24
W302424	30	24	24
W331824	33	18	24
W332124	33	21	24
W332424	33	24	24
W361224	36	12	24
W361524	36	15	24
W361824	36	18	24
W362124	36	21	24
W362424	36	24	24

Wall Diagonal Corner Cabinet

Item	W	H	D
WDC2412	24	12	12¼
WDC2415	24	15	12¼
WDC2430	24	30	12¼
WDC2436	24	36	12¼
WDC2442	24	42	12¼

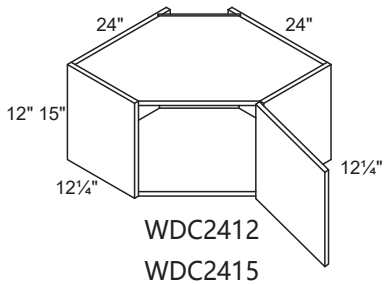

WDC2412
WDC2415

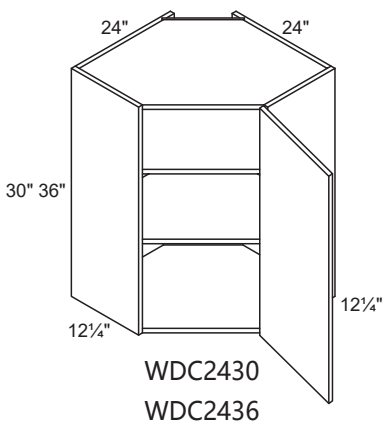

WDC2430
WDC2436

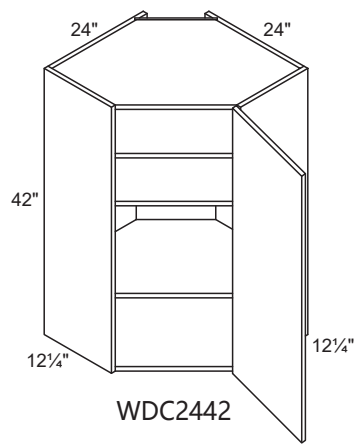

WDC2442

Wall Blind Corner Cabinet

Item	W	H	D
WBC2730	27	30	12
WBC2736	27	36	12
WBC2742	27	42	12

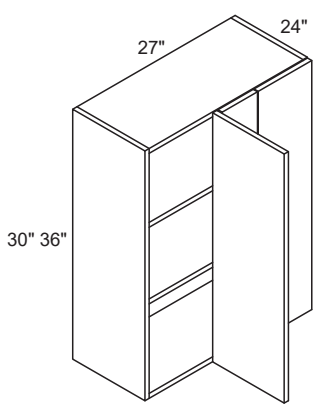

WBC2730
WBC2736

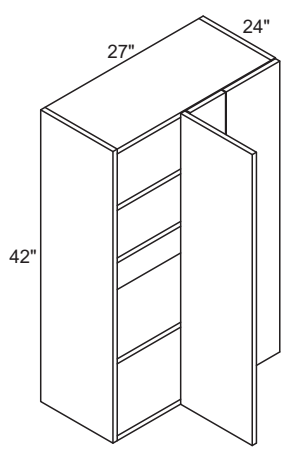

WBC2742

posheen™

Wall Lazy Suan Cabinet

Item	W	H	D
WLS2412	24	12	12
WLS2415	24	15	12
WLS2430	24	30	12
WLS2436	24	36	12
WLS2442	24	42	12

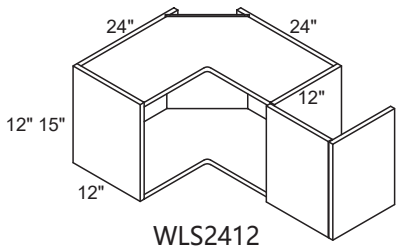

WLS2412
WLS2415

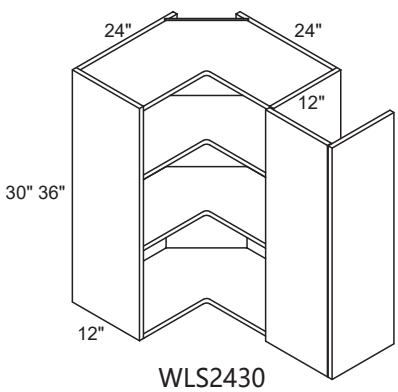

WLS2430
WLS2436

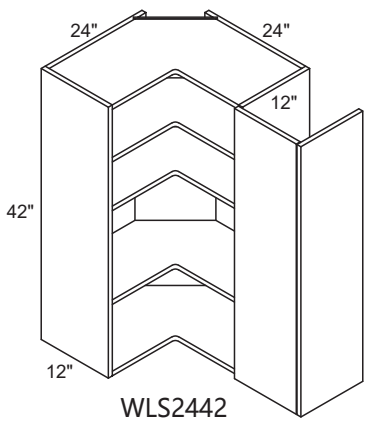

WLS2442

Vertical Pigeon Hole Fole Finish Interior Cabinet

Item	W	H	D
VPH3012	6	30	12
VPH3612	6	36	12
VPH4212	6	42	12

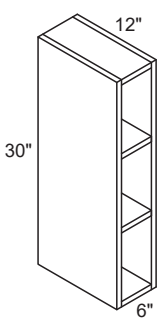

VPH3012

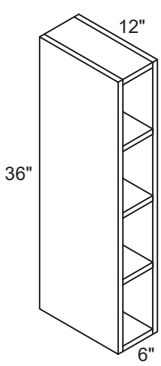

VPH3612

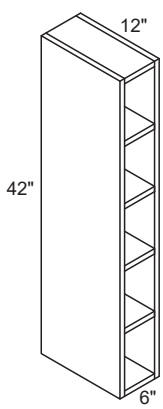

VPH4212

Vanity 3-Drawers Base Cabinet

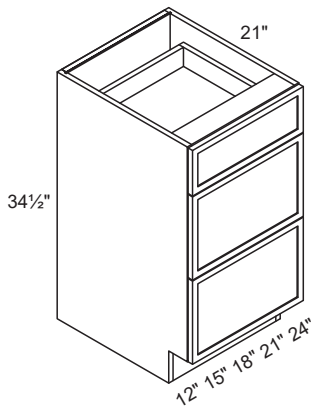

Item	W	H	D
VDB12-3	12	34½	21
VDB15-3	15	34½	21
VDB18-3	18	34½	21
VDB21-3	21	34½	21
VDB24-3	24	34½	21

Vanity Sink Base Cabinet

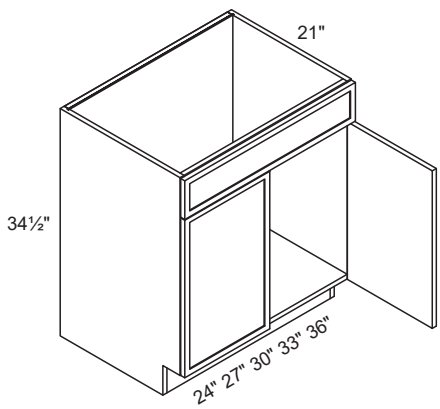

Item	W	H	D
VSB24	24	34½	21
VSB27	27	34½	21
VSB30	30	34½	21
VSB33	33	34½	21
VSB36	36	34½	21

Roll Out Tray

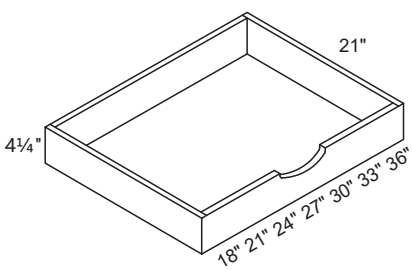

Item	W	H	D
ROT18	18	4¼	21
ROT21	21	4¼	21
ROT24	24	4¼	21
ROT27	27	4¼	21
ROT30	30	4¼	21
ROT33	33	4¼	21
ROT36	36	4¼	21

posheen™

Crown Molding & Trim

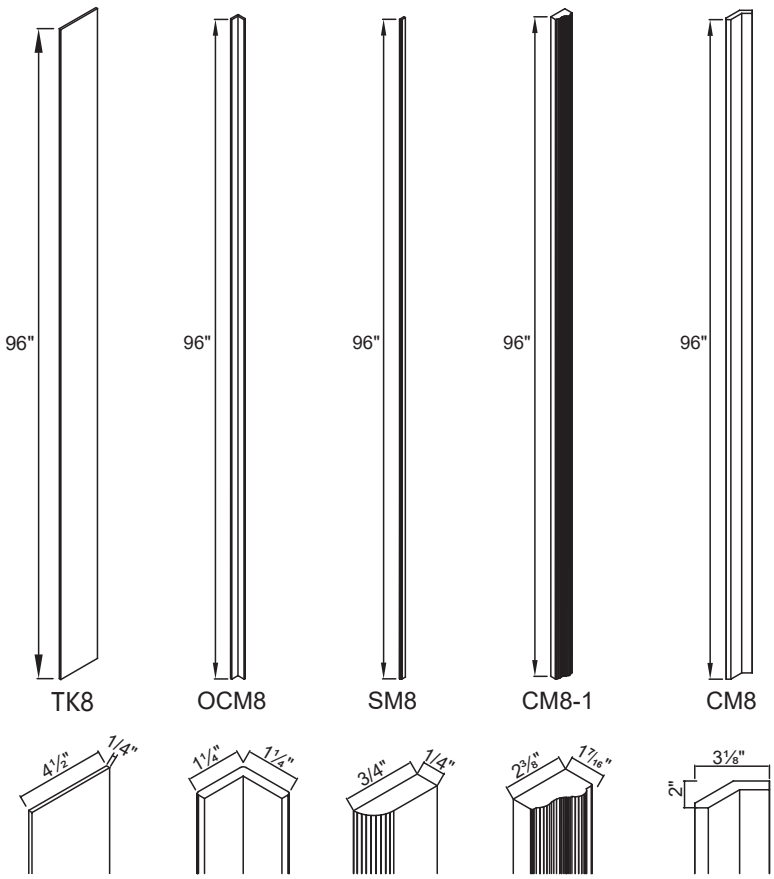

Item	W	H	D
TK8	4½	96	1/4
OCM8	1¼	96	1¼
SM8	3/4	96	1/4
CM8-1	2⅜	96	1 7/16
CM8	2	96	3⅛

Cabinet Filler

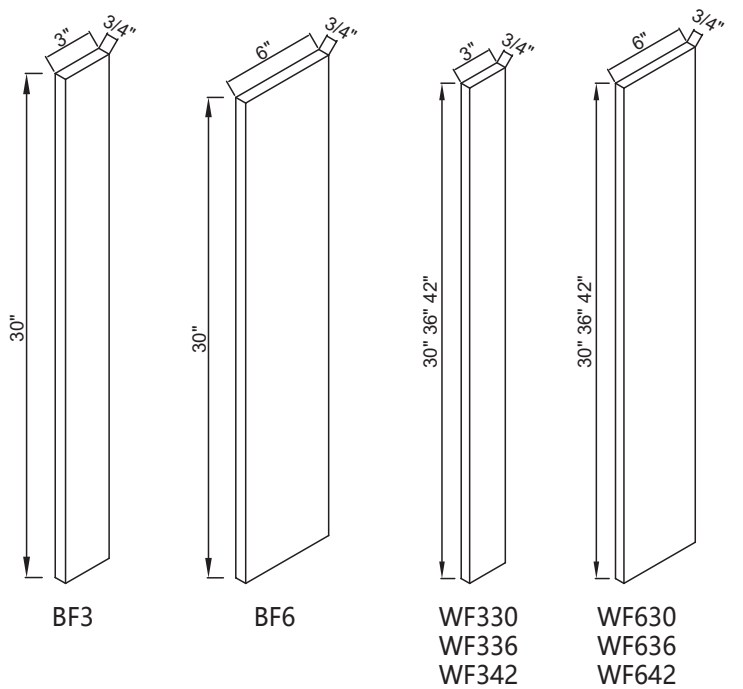

Item	W	H	D
BF3	3	30	3/4
BF6	6	30	3/4
WF330	3	30	3/4
WF630	6	30	3/4
WF336	3	36	3/4
WF636	6	36	3/4
WF342	3	42	3/4
WF642	6	42	3/4

Tall Filler

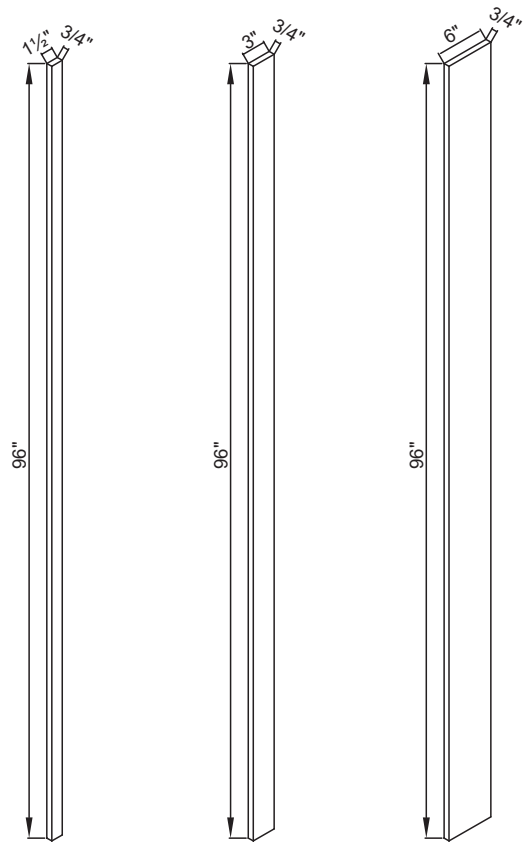

TF1.596 TF396 TF696

Item	W	H	D
TF1.596	1.5	96	3/4
TF396	3	96	3/4
TF696	6	96	3/4

Wall Cabinet End Panel

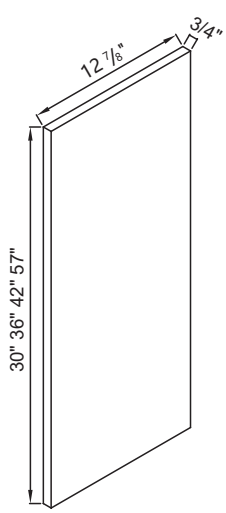

Item	W	H	D
WEP30	12 7/8	30	3/4
WEP36	12 7/8	33	3/4
WEP42	12 7/8	36	3/4
WEP57	12 7/8	42	3/4

posheen™

Island End Box

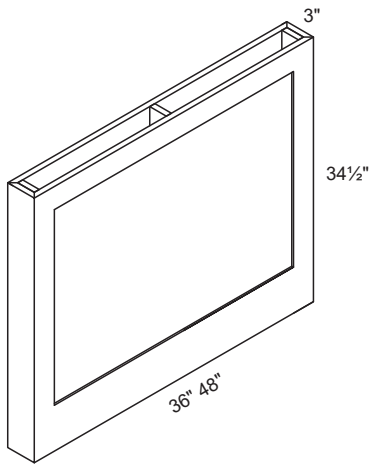

Item	W	H	D
IEB36	36	34½	3
IEB48	48	34½	3

Wall open shelf

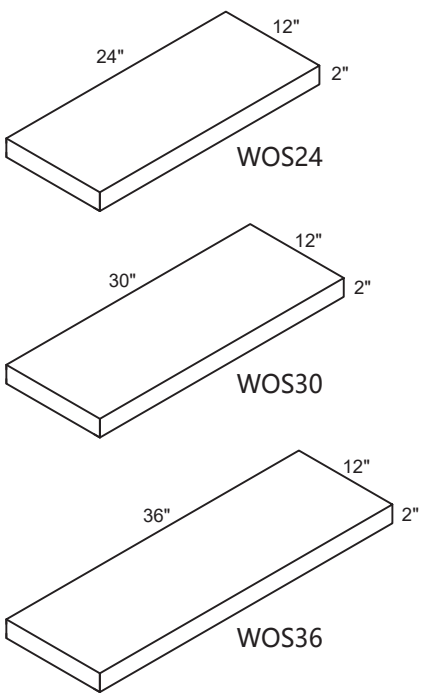

Item	W	H	D
WOS24	24	2	12
WOS30	30	2	12
WOS36	36	2	12

posheen™

Panel

Item	W	H	D
BEP21¾x34½x3/4"	21¾	34½	3/4
BEP24¾x34½x3/4"	24¾	34½	3/4
BEP25½x34½x3/4"	25½	34½	3/4
BEP37½x34½x3/4"	37½	34½	3/4
BEP49½x34½x3/4"	49½	34½	3/4
BEP96x34½x3/4	96	34½	3/4
BEP96x48x3/4	96	48	3/4

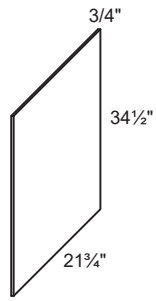

BEP21¾x34½x3/4"

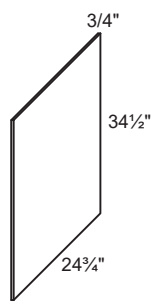

BEP24¾x34½x3/4"

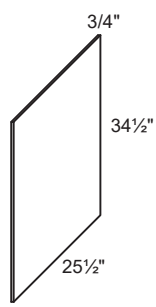

BEP25½x34½x3/4"

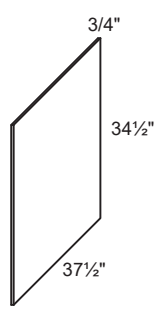

BEP37½x34½x3/4"

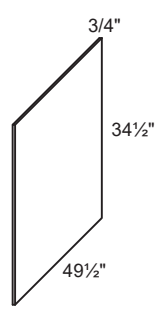

BEP49½x34½x3/4"

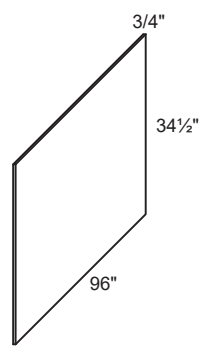

BEP96x34½x3/4

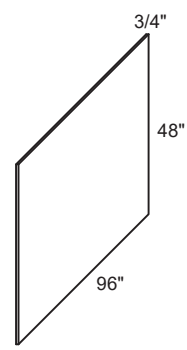

BEP96x48x3/4

posheen™

Dishwasher End Panel

Item	W	H	D
DWP3	24	34½	3

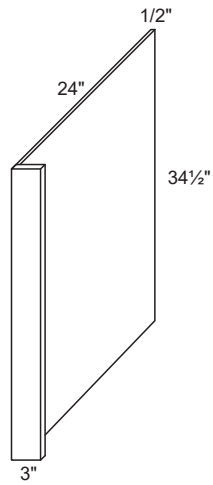

Refrigerator End Panel

Item	W	H	D
REP96x24¾x3/4"	24¾	96	3/4

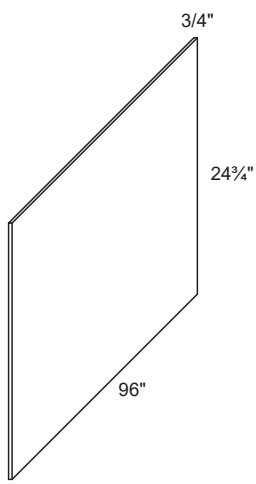

Sample Door

Item	W	H	D
SD1215	12	15	3/4

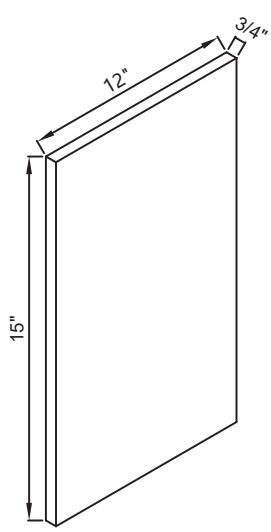

Aug. 2025