Krafter's Land

Frameless Cabinets

Krafter's Land

One-stop shop for a kitchen or bath remodel.

1201 Andover Park E, Suite 103, Tukwila WA 98188

206-809-6339 info@kraftersland.com

We truly believe that having a kitchen both functional and aesthetic is the dream for most homeowners and even those living in rental spaces. At Krafter's Land, our mission is to improve the living quality of our customers' life through intelligent designs and durable products.

Krafter's Land Cabinetry Inc was founded in Seattle, USA in 2020, and our goal is growing into one of the largest international kitchen remodel suppliers. As a leading supplier, we will have numerous manufacturing distributors across the whole country. By developing one of the largest wholesaling networks to provide the fastest supply turnaround time for all customers.

We are fully committed to working with all customers to satisfy their needs and exceed their expectations. Krafter's Land focuses on providing an affordable solution for your kitchen and bath remodeling needs by selling top notch products and providing excellent customer service.

Our products include cabinets, quartz stones, flooring, shower door, mosaic, faucets and sinks etc. Over the years, we've built trust with our customers because we reflect the craftsmanship and quality in our brand product that we would want in our own homes. We continually strive to strengthen that confidence in all products.

Cabinet Warranty
5-Year Limited

Krafter's Land Cabinetry, Inc warrants to the original consumer purchaser that cabinetry,door hinges, and drawer glides will be free from defects in material and workmanship under normal use and service for a period of 5 years from purchase date (Proof of Purchase is required).This warranty is extended to the original purchasing consumer only for use of the product within the United States and is not transferrable. No changes or modifications can be made to this warranty except by an officer of Krafter's Land Cabinetry, Inc.

This warranty does not cover normal wear and tear, damage or defects caused by accidents, misuse, abuse, or lack of necessary maintenance; nor does it cover alteration, modification, improper installation, improper handling / storage, environmental conditions, nor any labor expenses.

Vendor, at our option, may elect to repair or replace with a functionally equivalent product any product covered by this warranty. Some replacement parts are subject to availability and may differ from original parts received. Return of defective product may be required for a replacement to be issued. Repair parts or replacement parts are at the expense of the vendor, but customer shall bear all other expenses.These expenses may include, but are not limited to, cost of removal and reinstallation of product, labor expenses, etc. Further, we reserve the right to modify or alter any Product design, specifications or materials without obligation to make similar changes to Products previously manufactured or sold by Us.

Just as no two trees are alike, no two pieces of wood are alike. The variation in colorand grain pattern in wood adds to its natural beauty and is not considered an imperfection. Environmental factors, including but not limited to artificial / natural light, moisture, cleaners, smoke, etc., may cause the darkening or mellowing of a cabinet over time. This is a natural process and can be expected. This warranty does not cover the natural aging or darkening / mellowing of wood color, the inherent growth characteristics of, or variation in wood.

No dealer, agent, contractor, or installer has any right to change or extend the above warranty. These warranty statements only, are the expressed warrants extended by Krafter's Land Cabinetry Inc. In lieu of any other warranties, this warranty shall constitute the entire liability of Krafter's Land Cabinetry Inc. All styles, finishes, hardware, and specifications are also subject to change without prior notice. Krafter's Land Cabinetry Inc. is not responsible for any typographical errors.

Wall Cabinet

- **1. Door:** ¾” MDF/Particle Board core door panel.
- **2. Side Panel:** ¾” Melamine laminated plywood side panel.
- **3. Cam-Lock system:** Easy-to-Install euro cam-lock system with dowels for cabinet box.
- **4. Full-Depth shelf:** ¾” Melamine laminated plywood shelf.
- **5. Hinge:** DTC brand six-way adjustable soft-close hinge.

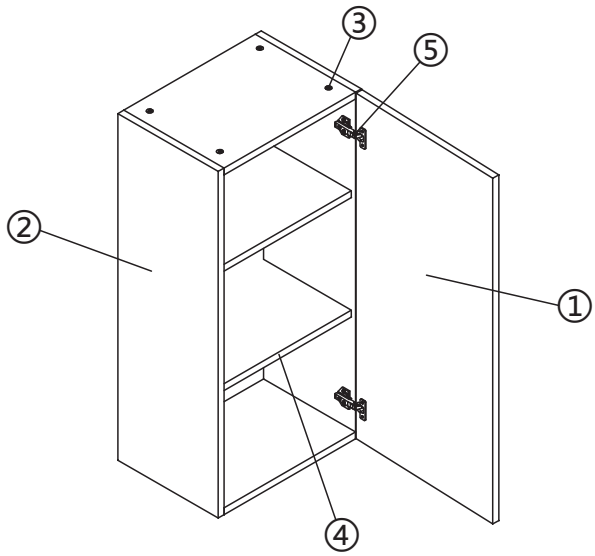

Base Cabinet

- **1. Door:** ¾” MDF/Particle Board core door panel.
- **2. Side Panel:** ¾” Melamine laminated plywood side panel.
- **3. Back Panel:** ¼” melamine laminated MDF back panel.
- **4. Top Support:** ¾” melamine laminated plywood top and back for secure purpose.
- **5. Cam-Lock system:** Easy-to-Install euro cam-lock system with dowels for cabinet box.
- **6. Full-Depth shelf:** ¾” Melamine laminated plywood shelf.
- **7. Hinge:** DTC brand six-way adjustable soft-close hinge.
- **8. Drawer Back and bottom Panel:** 5/8” melamine laminated plywood.
- **9. Draw glides:** Durable metal corner bracket to secure the cabinet box.
- **10. Toe Kick:** 3/4" melamine laminated plywood toe kick panel.

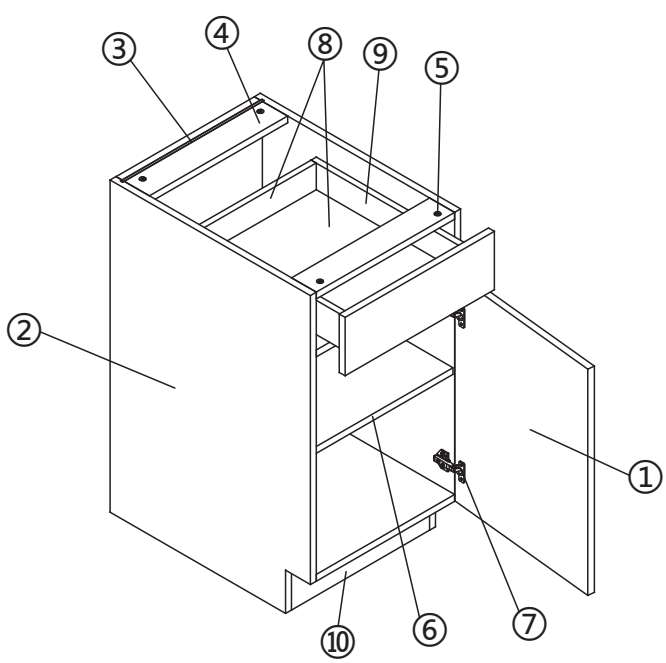

Base Cabinet Coding:

1. Standard base cabinets are 24″ deep & 34 ¼″ high.
2. Standard vanity base cabinets are 21″ deep & 34 ¼″ high.
3. Add door thickness for total depth.
4. Additional panels are needed for the exposed side and toe kick.
5. Cabinet Box and Cabinet Door/Drawer are packed separately.

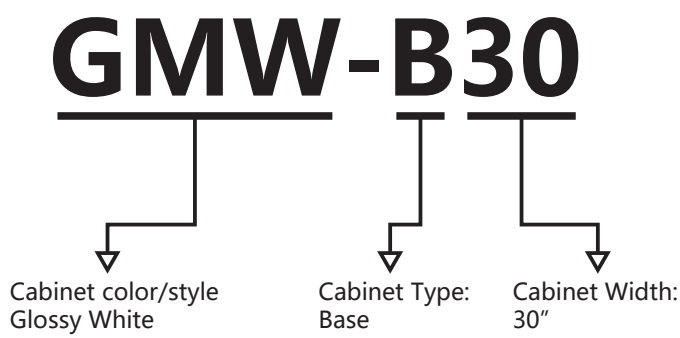

Wall Cabinet Coding:

1. Standard wall cabinets are 12″ deep.
2. Standard Refrigerator wall cabinets are 12″ or 24″ deep.
3. Add door thickness for total depth.
4. Additional panels are needed for the exposed side.
5. Cabinet Box and Cabinet Door/Drawer are packed separately.

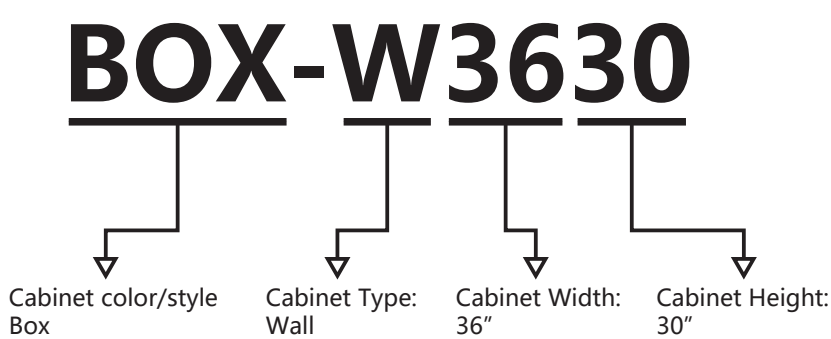

Glossy White (GMW)

Dark Ash (MDG)

Dusky Grey (MLG)

Light Grain (MLT)

Dark Grain (MDT)

White Oak (MWO)

Matte White (MLW)

Kanas Oak (KO)

Laminam Grey (LG)

Dekor Black (DB)

Cinnamon Latte (CL)

Riva Oak (RO)

Walnut Grain (WNG)

Ocean Shore (OSR)

White Oak（MWO)

Dark Ash (MDG)

Dark Grain (MDT)

White Color Box

Wood Color Box

posheen™

Base Full Door Cabinet

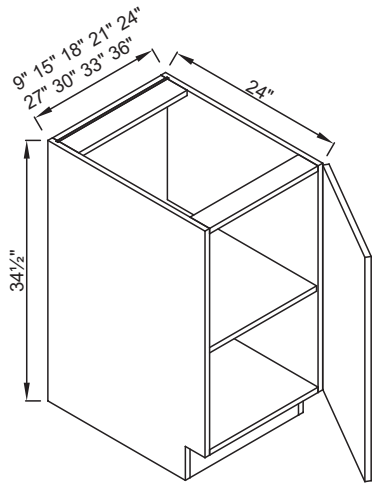

Item	W	H	D
B09FD	9	34½	24
B12FD (OSR only)	12	34½	24
B15FD (OSR only)	15	34½	24
B18FD (OSR only)	18	34½	24
B21FD (OSR only)	21	34½	24
B24FD (OSR only)	24	34½	24
B27FD (OSR only)	27	34½	24
B30FD (OSR only)	30	34½	24
B33FD (OSR only)	33	34½	24
B36FD (OSR only)	36	34½	24

Base Cabinet

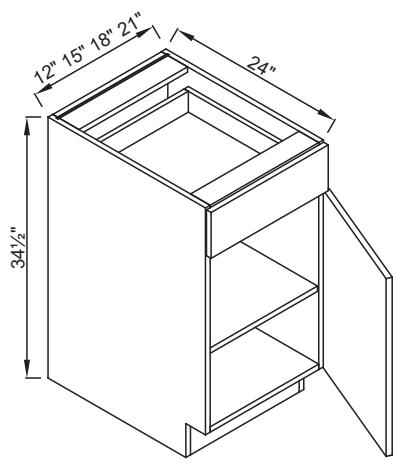

B12
B15
B18
B21

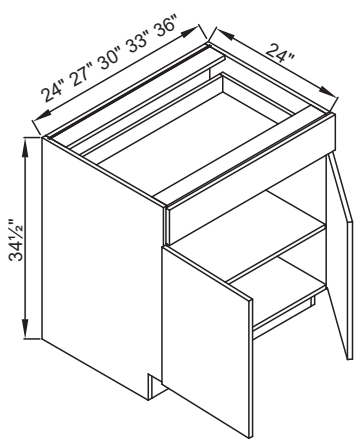

B24
B27
B30
B33
B36

Item	W	H	D
B12	12	34½	24
B15	15	34½	24
B18	18	34½	24
B21	21	34½	24
B24	24	34½	24
B27	27	34½	24
B30	30	34½	24
B33	33	34½	24
B36	36	34½	24

Drawer hardware is included in BOX.

posheen™

2-Drawers Base Cabinet

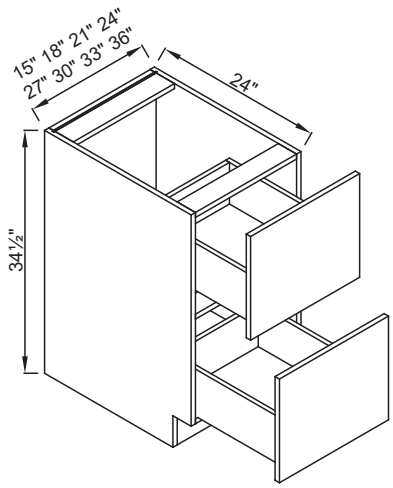

Item	W	H	D
2DB15 (OSR only)	15	34½	24
2DB18 (OSR only)	18	34½	24
2DB21 (OSR only)	21	34½	24
2DB24	24	34½	24
2DB27	27	34½	24
2DB30	30	34½	24
2DB33	33	34½	24
2DB36	36	34½	24

Drawer hardware is included in BOX.

3-Drawers Base Cabinet

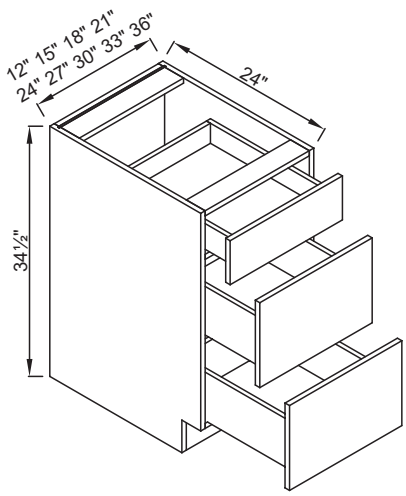

Item	W	H	D
3DB12	12	34½	24
3DB15	15	34½	24
3DB18	18	34½	24
3DB21	21	34½	24
3DB24	24	34½	24
3DB27	27	34½	24
3DB30	30	34½	24
3DB33	33	34½	24
3DB36	36	34½	24

Drawer hardware is included in BOX.

Base Microwave Cabinet

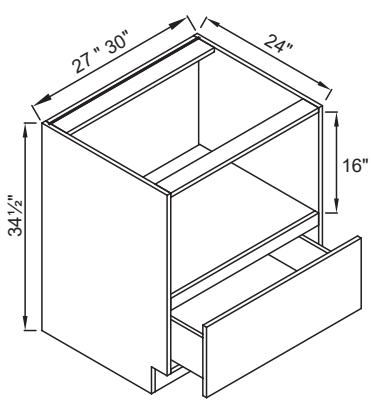

Item	W	H	D
BMC27	27	34½	24
BMC30	30	34½	24

Base Blind Corner Cabinet

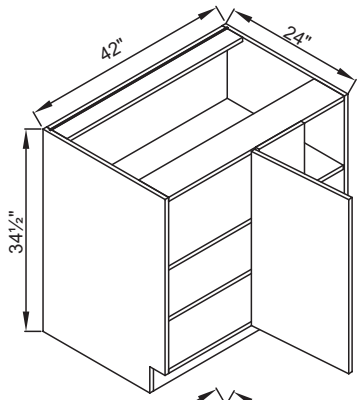

BBC42-L

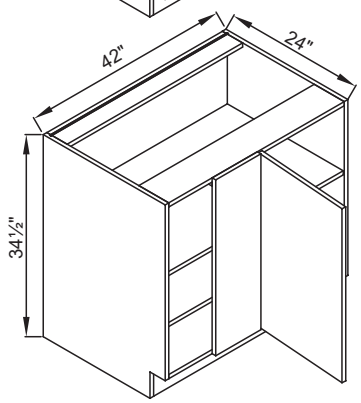

BBC42-R

Item	W	H	D
BBC42-L	42	34½	24
BBC42-R	42	34½	24
BBC Swing Trays			

Fixed shelves are included in the box and swing tray is sold separately and can replace the fix shelves.

Base Lazy Susan Cabinet

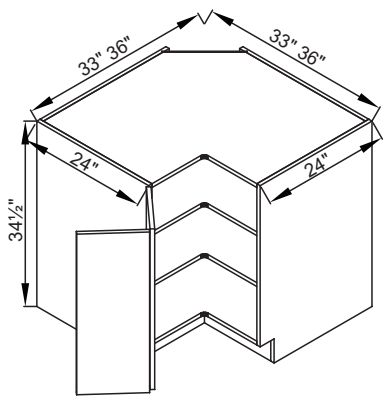

BLS33

BLS36

Item	W	H	D
BLS33	33	34½	24
BLS36	36	34½	24
BLS33 Rotating Shelf			
BLS36 Rotating Shelf			

Fixed shelves are included in the box and rotating shelf is sold separately and can replace the fix shelves.

posheen™

Base Spice Rack Cabinet	Item	W	H	D
	BSR09	9	34½	24
	BSR12	12	34½	24

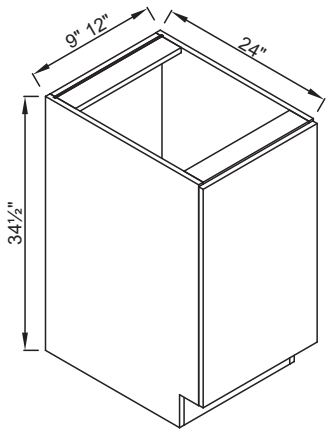

Spice Rack BSR09

Spice Rack BSR12

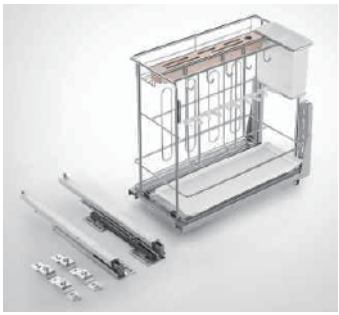

Base Waste Basket Cabinet	Item	W	H	D
	BWB18-D	18	34½	24

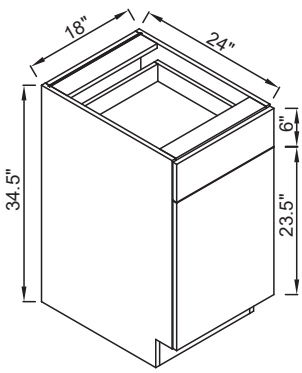

BWB18 Waster Container

Sink Base Cabinet	Item	W	H	D
	SB30	30	34½	24
	SB33	33	34½	24
	SB36	36	34½	24
	SB42	42	34½	24

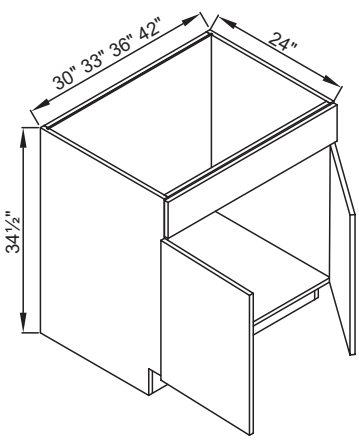

posheen™

Apron Sink Base Cabinet

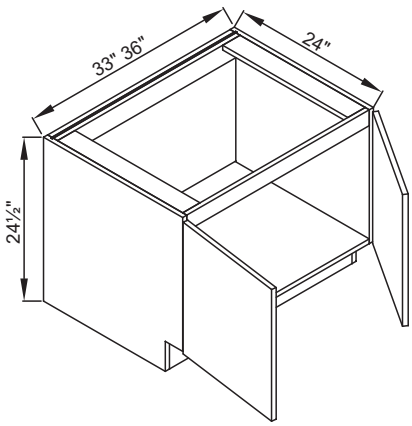

Item	W	H	D
FSB33-N	33	24½	24
FSB36-N	36	24½	24

Oven Cabinet

Item	W	H	D
OC3084	30	84	24
OC3090	30	90	24
OC3096	30	96	24

Drawer hardware is included in BOX.

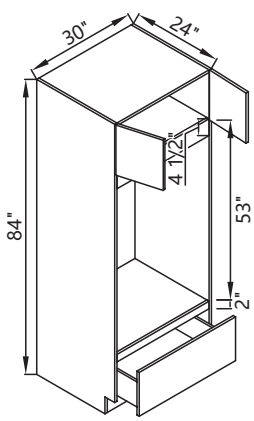

OC3084

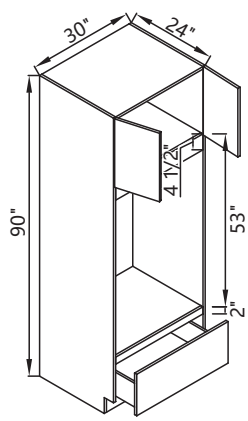

OC3090

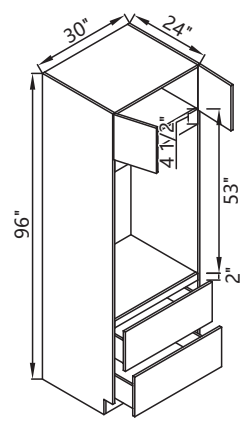

OC3096

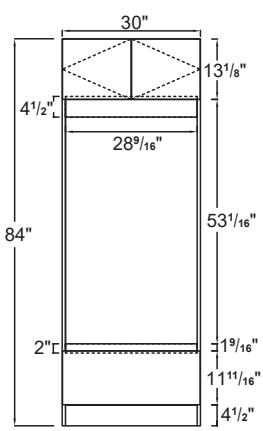

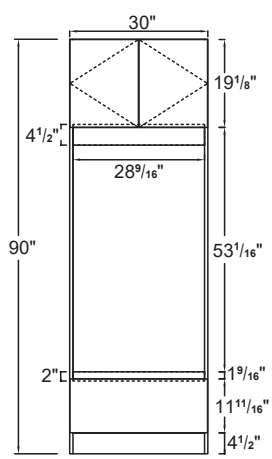

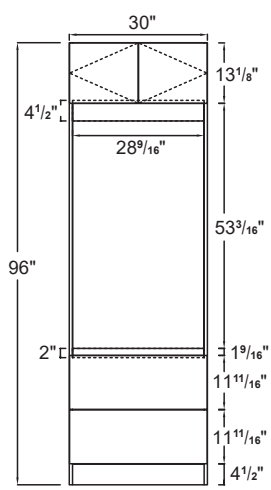

posheen™

Pantry Cabinet

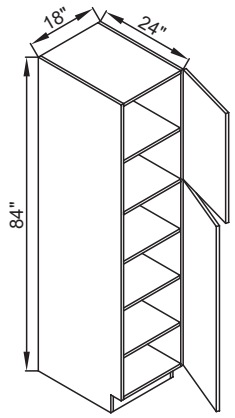

PC1884

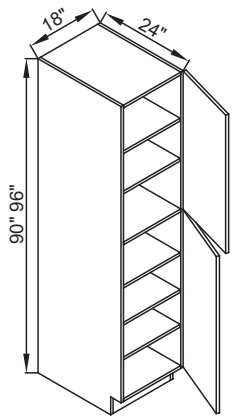

PC1890
PC1896

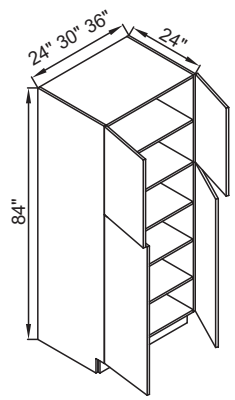

PC2484
PC3084
PC3684

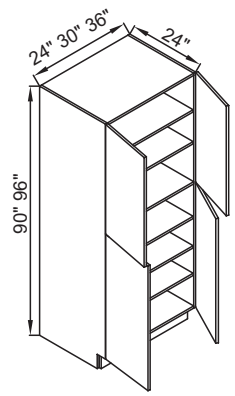

PC2490
PC2496
PC3090
PC3096
PC3690
PC3696

Item	W	H	D
PC1884	18	84	24
PC2484	24	84	24
PC3084	30	84	24
PC3684	36	84	24
PC1890	18	90	24
PC2490	24	90	24
PC3090	30	90	24
PC3690	36	90	24
PC1896	18	96	24
PC2496	24	96	24
PC3096	30	96	24
PC3696	36	96	24

posheen™

Wall Cabinet

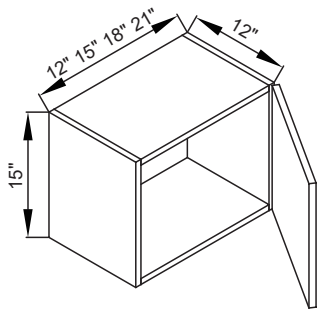

W1215
W1515
W1815
W2115

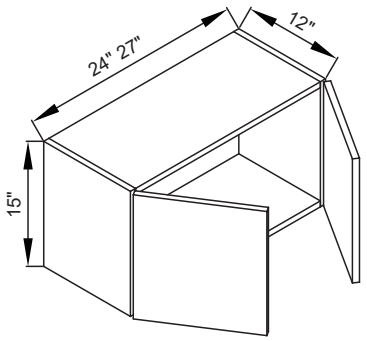

W2415
W2715

Item	W	H	D
W1215	12	15	12
W1515	15	15	12
W1815	18	15	12
W2115	21	15	12
W2415	18	15	12
W2715	21	15	12

Wall Cabinet

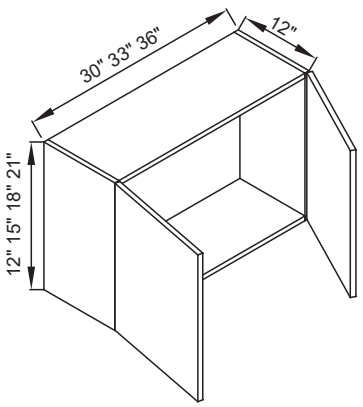

W3012
W3312
W3612
W3015
W3315
W3615
W3018
W3318
W3618
W3021
W3321
W3621

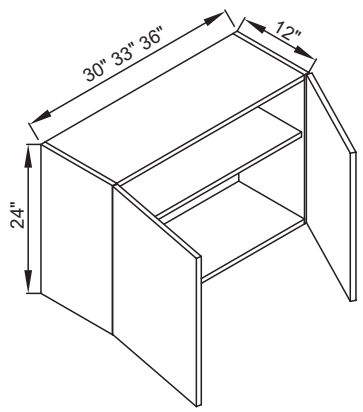

W3024
W3324
W3624

Item	W	H	D
W3012	30	12	12
W3312	33	12	12
W3612	36	12	12
W3015	30	15	12
W3315	33	15	12
W3615	36	15	12
W3018	30	18	12
W3318	33	18	12
W3618	36	18	12
W3021	30	21	12
W3321	33	21	12
W3621	36	21	12
W3024	30	24	12
W3324	33	24	12
W3624	36	24	12

posheen™

Wall Cabinet

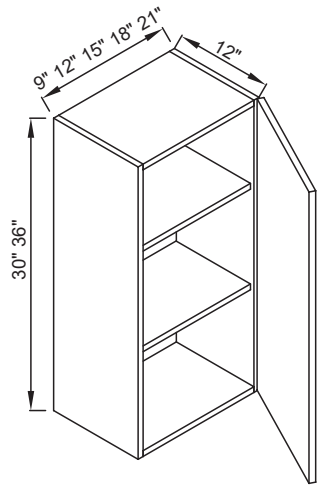

W0930
W1230
W1530
W1830
W2130
W0936
W1236
W1536
W1836
W2136

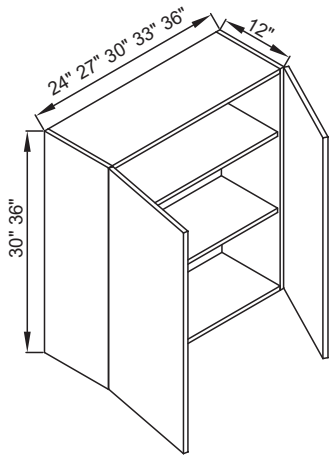

W2430
W2730
W3030
W3330
W3630
W2436
W2736
W3036
W3336
W3636

Item	W	H	D
W0930	9	30	12
W1230	12	30	12
W1530	15	30	12
W1830	18	30	12
W2130	21	30	12
W2430	24	30	12
W2730	27	30	12
W3030	30	30	12
W3330	33	30	12
W3630	36	30	12
W0936	9	36	12
W1236	12	36	12
W1536	15	36	12
W1836	18	36	12
W2136	21	36	12
W2436	24	36	12
W2736	27	36	12
W3036	30	36	12
W3336	33	36	12
W3636	36	36	12

Wall Cabinet

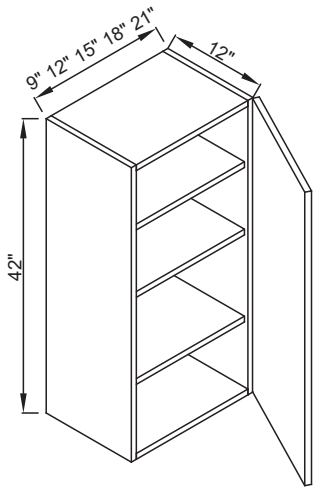

W0942
W1242
W1542
W1842
W2142

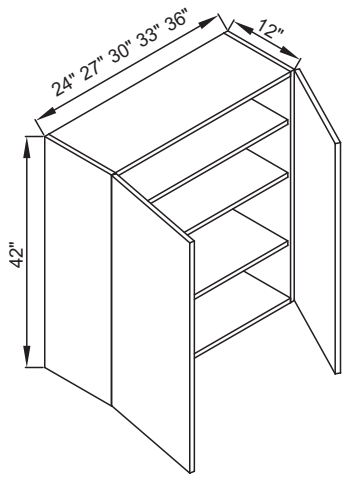

W2442
W2742
W3042
W3342
W3642

Item	W	H	D
W0942	9	42	12
W1242	12	42	12
W1542	15	42	12
W1842	18	42	12
W2142	21	42	12
W2442	24	42	12
W2742	27	42	12
W3042	30	42	12
W3342	33	42	12
W3642	36	42	12

Wall Cabinet

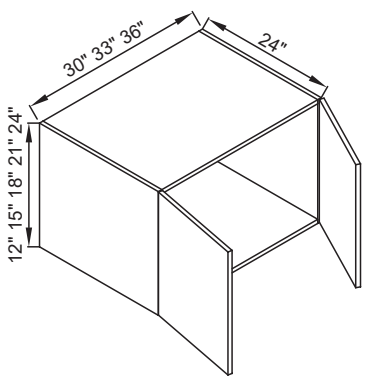

W301824
W302124
W302424
W331824
W332124
W332424
W361224
W361524
W361824
W362124

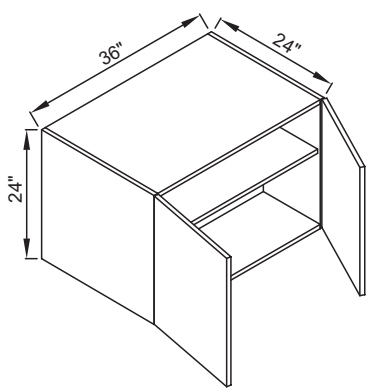

W362424

Item	W	H	D
W301824	30	18	24
W302124	30	21	24
W302424	30	24	24
W331824	33	18	24
W332124	33	21	24
W332424	33	24	24
W361224	36	12	24
W361524	36	15	24
W361824	36	18	24
W362124	36	21	24
W362424	36	24	24

posheen™

Wall Diagonal Corner Cabinet

Item	W	H	D
WDC2430	24	30	12¼
WDC2436	24	36	12¼
WDC2442	24	42	12¼

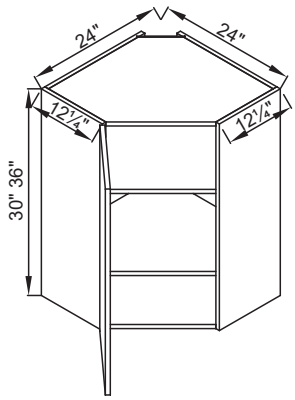

WDC2430
WDC2436

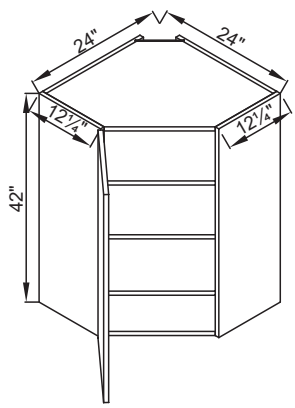

WDC2442

Wall Blind Corner Cabinet

Item	W	H	D
WBC2730	27	30	12
WBC2736	27	36	12
WBC2742	27	42	12

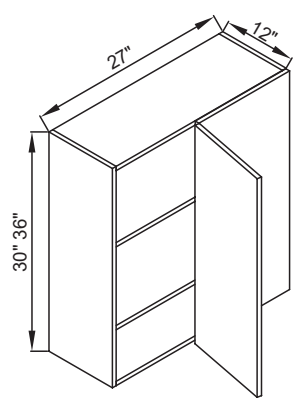

WBC2730
WBC2736

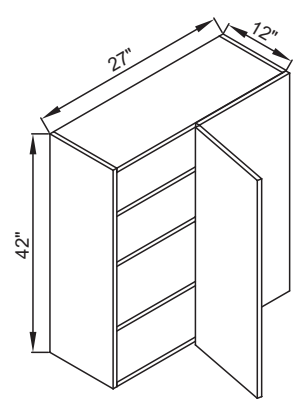

WBC2742

posheen™

Wall Lift Up Cabinet

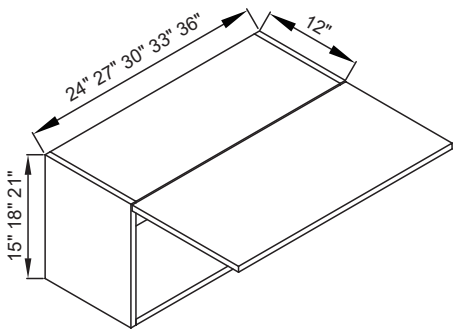

Item	W	H	D
W2415LU	24	15	12
W2715LU	27	15	12
W3015LU	30	15	12
W3315LU	33	15	12
W3615LU	36	15	12
W2418LU	24	18	12
W2718LU	27	18	12
W3018LU	30	18	12
W3318LU	33	18	12
W3618LU	36	18	12
W2421LU	24	21	12
W2721LU	27	21	12
W3021LU	30	21	12
W3321LU	33	21	12
W3621LU	36	21	12

posheen™

Wall Single Lift Cabinet

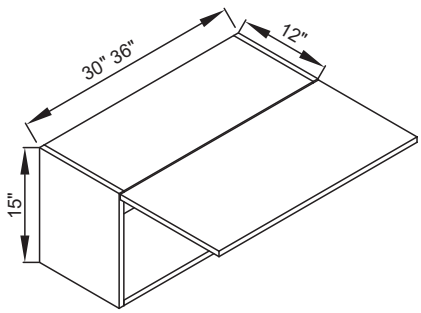

Item	W	H	D
W3015SL	30	15	12
W3615SL	36	15	12

The cabinet box and door panel are packed together. and both included into the price.

Vanity 3-Drawers Base Cabinet

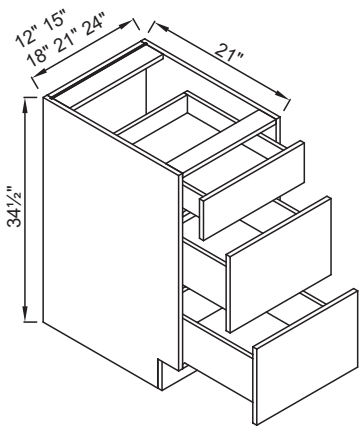

Item	W	H	D
VDB12-3	12	34½	21
VDB15-3	15	34½	21
VDB18-3	18	34½	21
VDB21-3	21	34½	21
VDB24-3	24	34½	21

Vanity Sink Base Cabinet

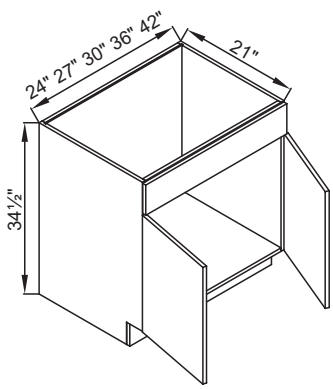

Item	W	H	D
VSB24	24	34½	21
VSB27	27	34½	21
VSB30	30	34½	21
VSB36	36	34½	21
VSB42	42	34½	21

Floating Vanity 2-Drawers Base Cabinet

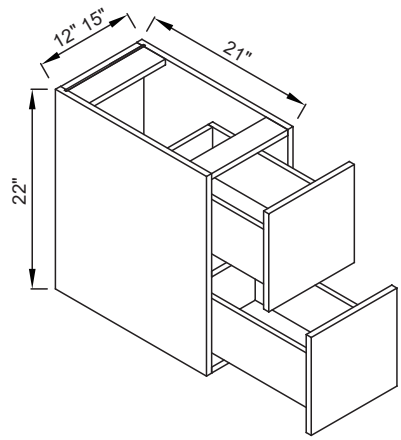

Item	W	H	D
FVD12	12	22	21
FVD15	15	22	21

Floating Vanity 2-Drawers Sink Base Cabinet

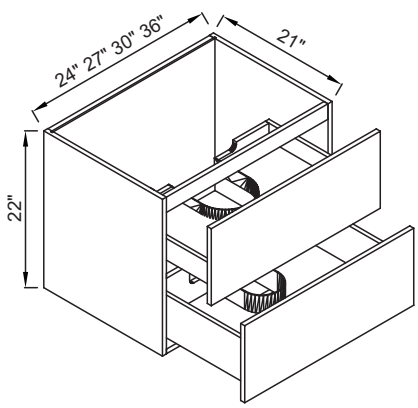

Item	W	H	D
FVD24S	24	22	21
FVD27S	27	22	21
FVD30S	30	22	21
FVD36S	36	22	21

Floating Vanity Full Door Cabinet

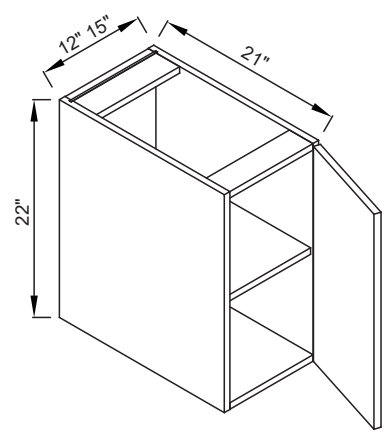

Item	W	H	D
FVB12FD	12	22	21
FVB15FD	15	22	21

posheen™

Floating Vanity Full Door Sink Base Cabinet

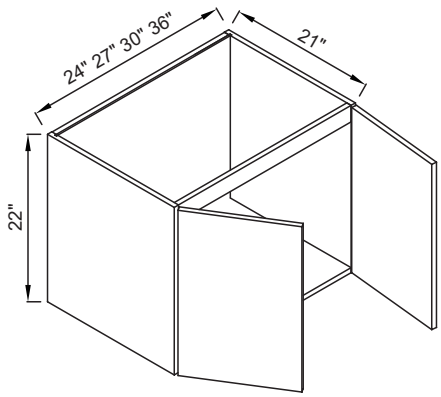

Item	W	H	D
FVB24	24	22	21
FVB27	27	22	21
FVB30	30	22	21
FVB36	36	22	21

Floating Vanity Accessories

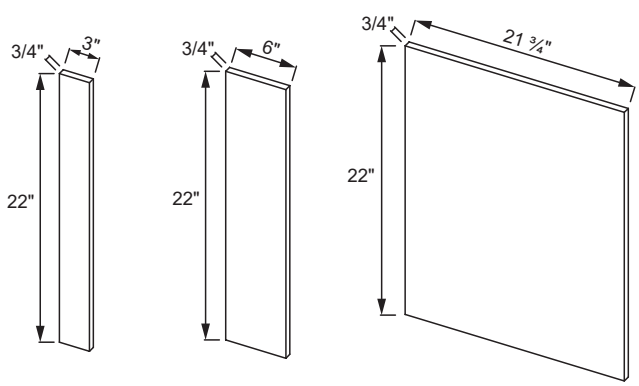

BF322 BF622 BEP21-3/4x22x3/4

Item	W	H	D
BF322	3	22	3/4
BF622	6	22	3/4
BEP21-3/4x22x3/4	21¾	22	3/4

Roll Out Tray

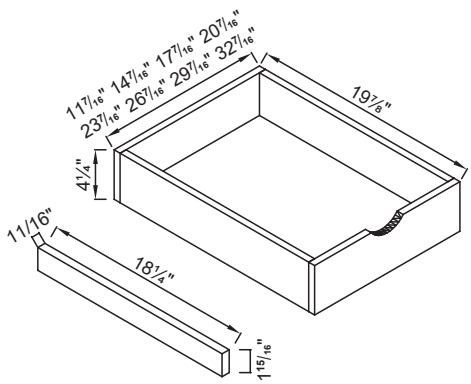

Item	W	H	D
ROT15	11 7/16	4 1/4	19 7/8
ROT18	14 7/16	4 1/4	19 7/8
ROT21	17 7/16	4 1/4	19 7/8
ROT24	20 7/16	4 1/4	19 7/8
ROT27	23 7/16	4 1/4	19 7/8
ROT30	26 7/16	4 1/4	19 7/8
ROT33	29 7/16	4 1/4	19 7/8
ROT36	32 7/16	4 1/4	19 7/8

Crown Molding & Trim

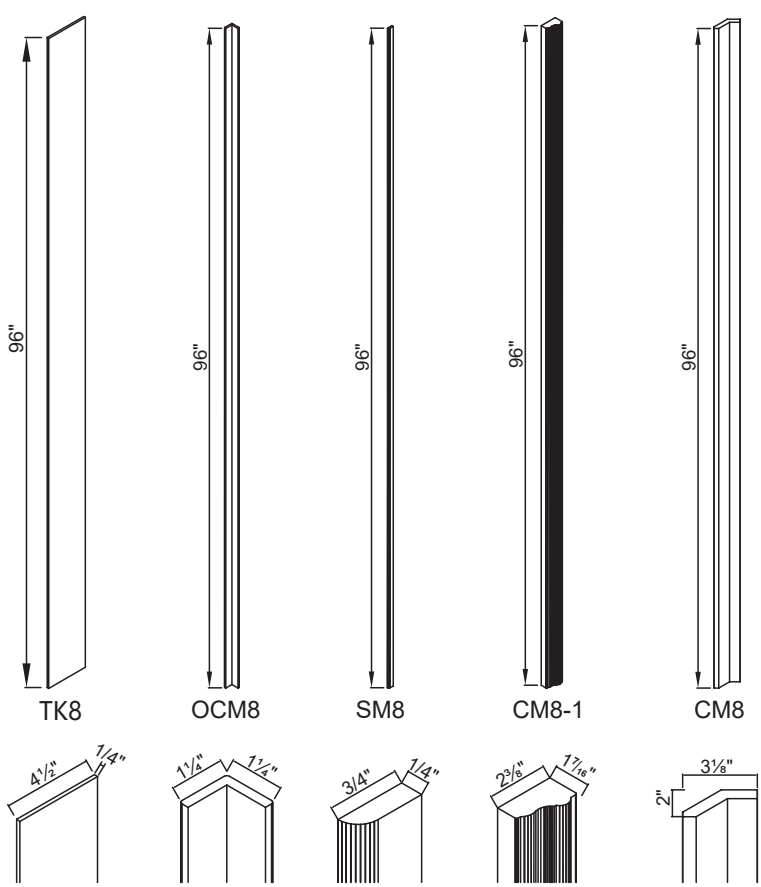

Item	W	H	D
TK8	4 1/2	96	1/4
OCM8	1 1/4	96	1 1/4
SM8	3/4	96	1/4
CM8-1	2 3/8	96	1 7/16
CM8	2	96	3 1/8

JUN 2025

posheen™

Cabinet Filler

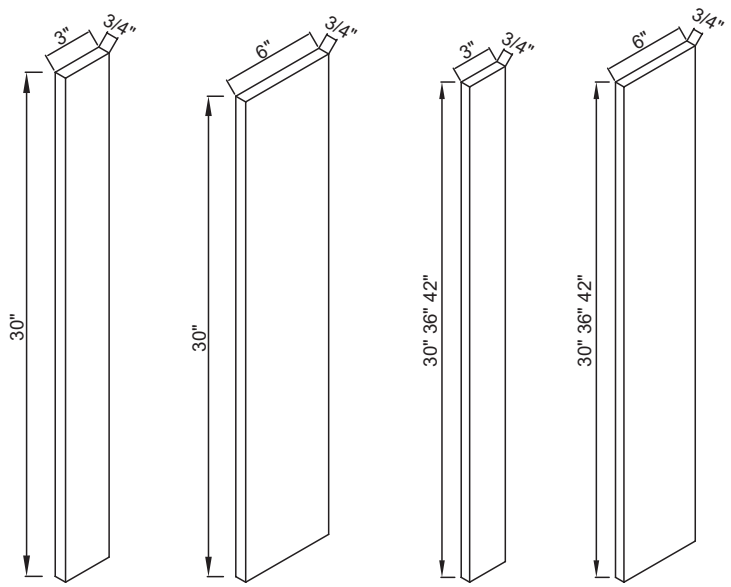

BF3 BF6 WF330 WF336 WF342 WF630 WF636 WF642

Item	W	H	D
BF3	3	30	3/4
BF6	6	30	3/4
WF330	3	30	3/4
WF630	6	30	3/4
WF336	3	36	3/4
WF636	6	36	3/4
WF342	3	42	3/4
WF642	6	42	3/4

Tall Filler

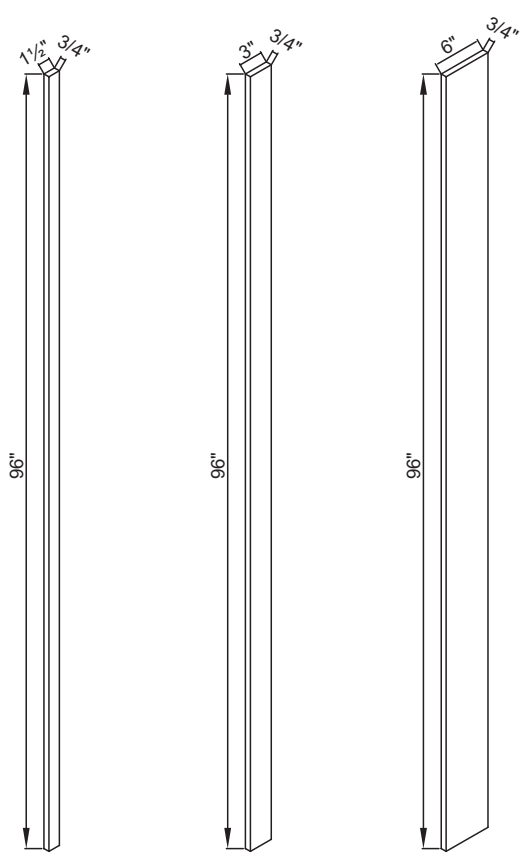

TF1.596 TF396 TF696

Item	W	H	D
TF1.596	1.5	96	3/4
TF396	3	96	3/4
TF696	6	96	3/4

Wall Cabinet End Panel

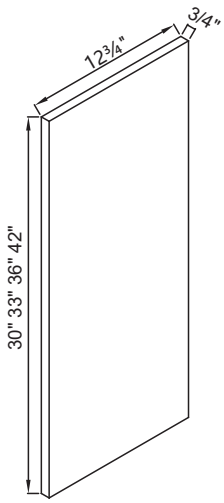

Item	W	H	D
WEP30	12¾	30	3/4
WEP33	12¾	33	3/4
WEP36	12¾	36	3/4
WEP42	12¾	42	3/4

Wall Box Side Panel

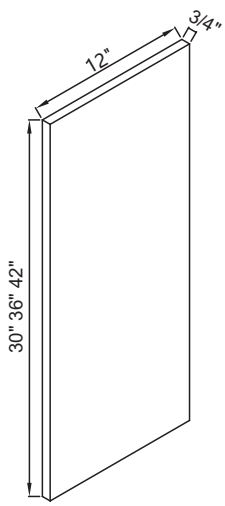

Item	W	H	D
WBP30	12	30	3/4
WBP36	12	36	3/4
WBP42	12	42	3/4

Box side panel can replace unfinished side panel.

posheen™

Panel	Item	W	H	D
	BEP57x12¾x3/4"	57	12¾	3/4
	BEP115x24¾x3/4"	115	24¾	3/4
	BEP21¾x34½x3/4"	21¾	34½	3/4
	BEP24¾x34½x3/4"	24¾	34½	3/4
	BEP25½x34½x3/4"	25½	34½	3/4
	BEP37½x34½x3/4"	37½	34½	3/4
	BEP49½x34½x3/4"	49½	34½	3/4
	BEP96x34½x1/4	96	34½	1/4
	BEP96x34½x3/4	96	34½	3/4
	BEP96x48x3/4	96	48	3/4

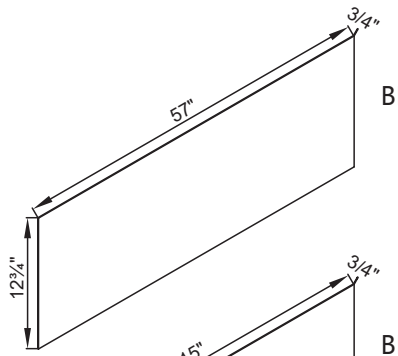

BEP57x12¾x3/4"

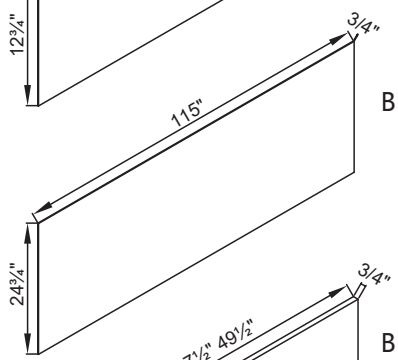

BEP115x24¾x3/4"

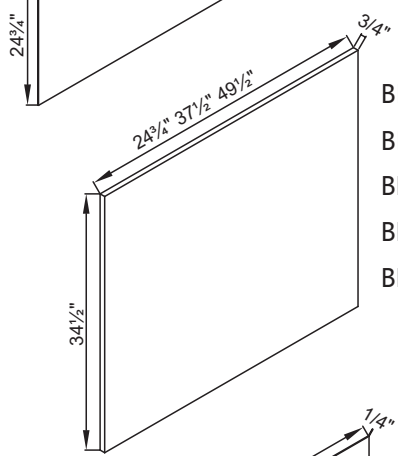

BEP21¾x34½x3/4"
BEP24¾x34½x3/4"
BEP25½x34½x3/4"
BEP37½x34½x3/4"
BEP49½x34½x3/4"

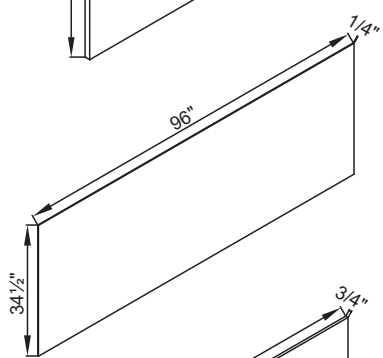

BEP96x34½x1/4

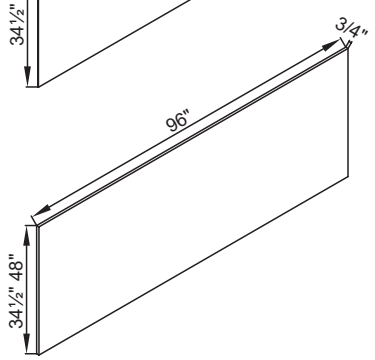

BEP96x34½x3/4
BEP96x48x3/4

posheen™

Dishwasher End Panel	Item	W	H	D
	DWP3	24¾	34½	3

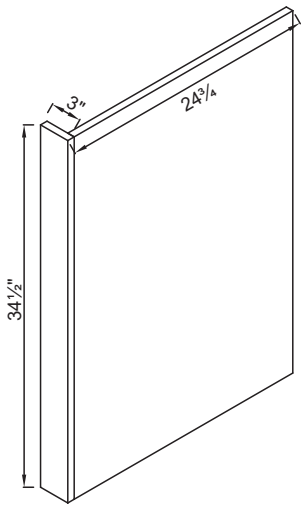

Refrigerator End Panel	Item	W	H	D
	REP96x24¾x3/4"	24¾	96	3/4

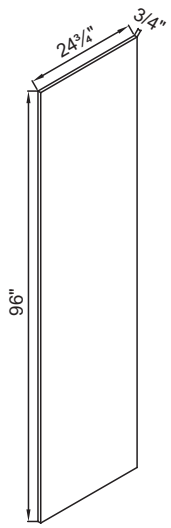
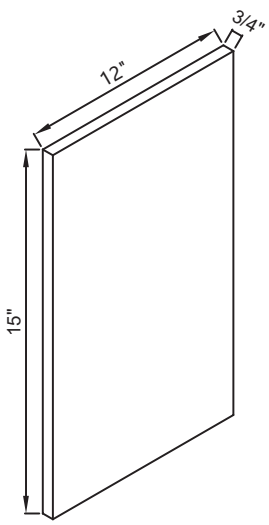
Sample Door	Item	W	H	D
	SD1215	12	15	3/4